Apach
Cook Line

**Catalogo parti di ricambio valido**
**dalla matricola 0000001 (31.10.2006) ad oggi (02.02.2023)**

**Catalogue pieces detachees**
**valable à partir du numero de Série n. 0000001 (31.10.2006) jusqu'à aujourd'hui (02.02.2023)**

**Ersatzteilkatalog**
**gültig ab Serien-Nr. 0000001 (31.10.2006) bis heute (02.02.2023)**

**Spare parts catalogue**
**valid from serial no. 0000001 (31.10.2006) up today (02.02.2023)**

**Catálogo de peças de reposição**
**válido do número de série 0000001 (31.10.2006) até hoje (02.02.2023)**

Le informazioni sono considerate non vincolanti. Le immagini rappresentate sono puramente indicative. Il produttore si riserva il diritto di apportare modifiche in qualsiasi momento senza preavviso.

Les informations données ne sont pas contraignantes. Les images montrées sont à titre indicatif. Le producteur se réserve le droit d'apporter des modifications sans préavis.
Die im vorliegenden Dokument aufgeführten Informationen und Bilder sind unverbindlich. Der Hersteller behält sich das Recht vor, jederzeit ohne vorherige Ankündigung Änderungen vorzunehmen
Info and drawing could be slightly different from reality and they cannot be considered as compelling. Manufacturer can modify info anytime without forewarning.
As Informações e desenhoS podem estar um pouco diferente da realidade e são puramente indicativas. O fabricante pode modificar estas informações a qualquer momento sem aviso prévio.

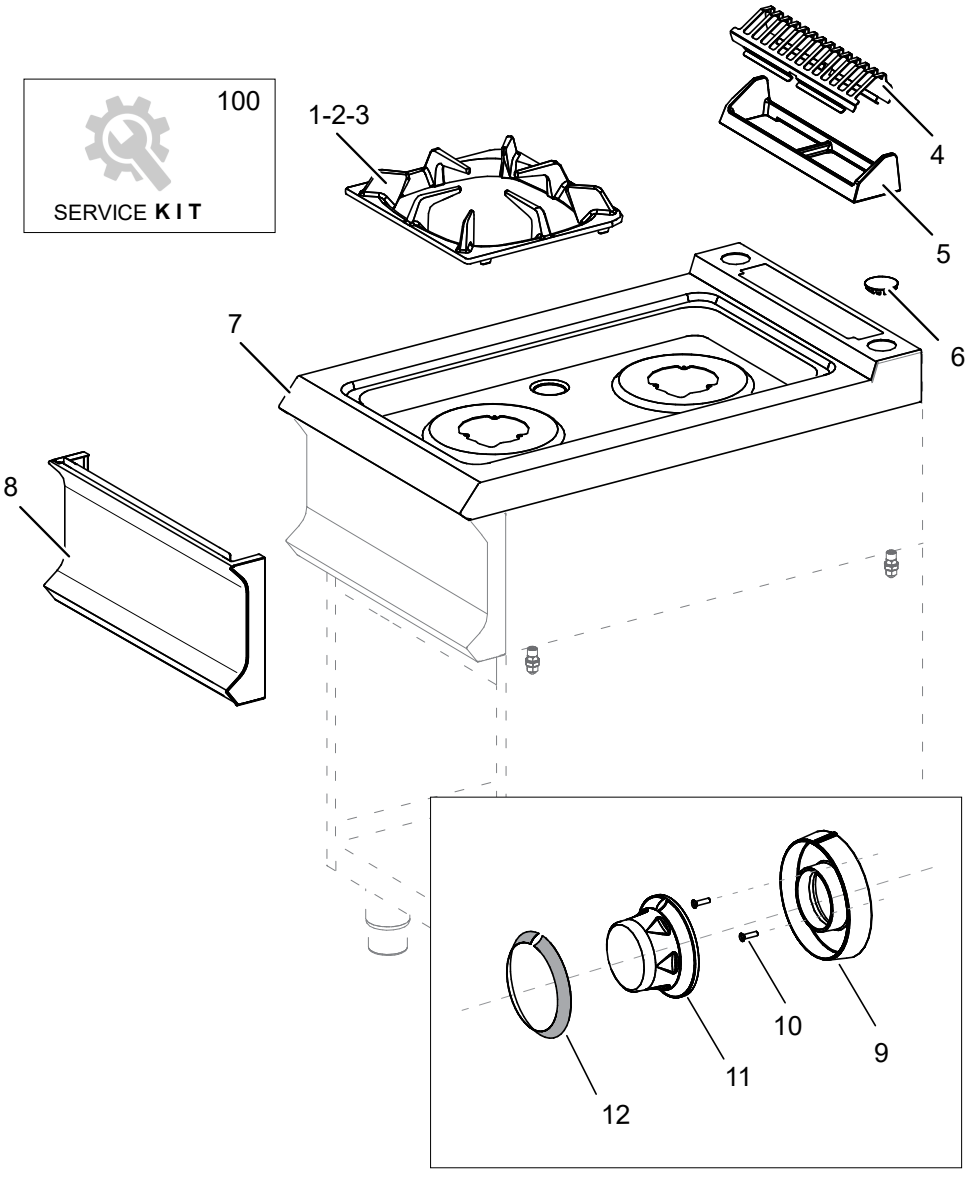
100
SERVICE KIT
1-2-3
4
5
6
7
8
9
10
11
12

| Nr. | Code | Title | Recommended |
|---|---|---|---|
| **1.** | RTCU700274 | *SINGLE CAST IRON GRID* | |
| **4.** | 202046 | *CHIMNEY GRILL* | |
| **7.** | 202008 | *WORK PLANE* | |
| **8.** | 202246 | *CONTROL PANEL* | |
| **11.** | 202201 | *BURNER KNOB* | |
| **12.** | 200160 | *KNOB RING* | |
| **100.** | ECS7004 | *RECOMMENDED PARTS FOR FB74A* | ✓ |

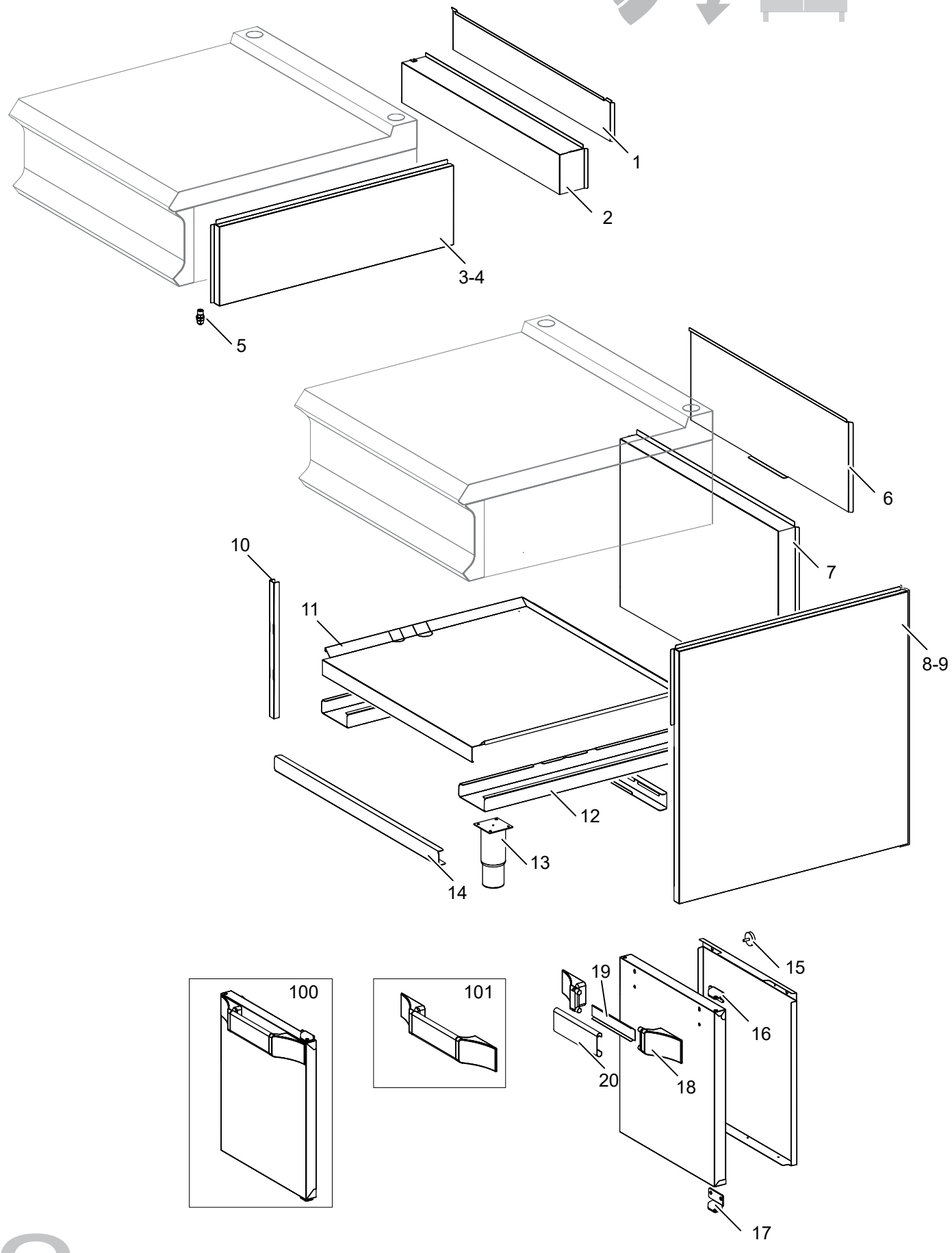
1
2
3-4
5
6
7
8-9
10
11
12
13
14
15
16
17
18
19
20
100
101

| Nr. | Code | Title | Recommended |
|---|---|---|---|
| **1.** | 200054 | *HIGH REAR* | |
| **2.** | 200053 | *LOW TOP REAR* | |
| **3.** | 200050 | *LEFT SIDE TOP* | |
| **4.** | 200051 | *RIGHT SIDE TOP* | |
| **5.** | 183993 | *FOOT* | |

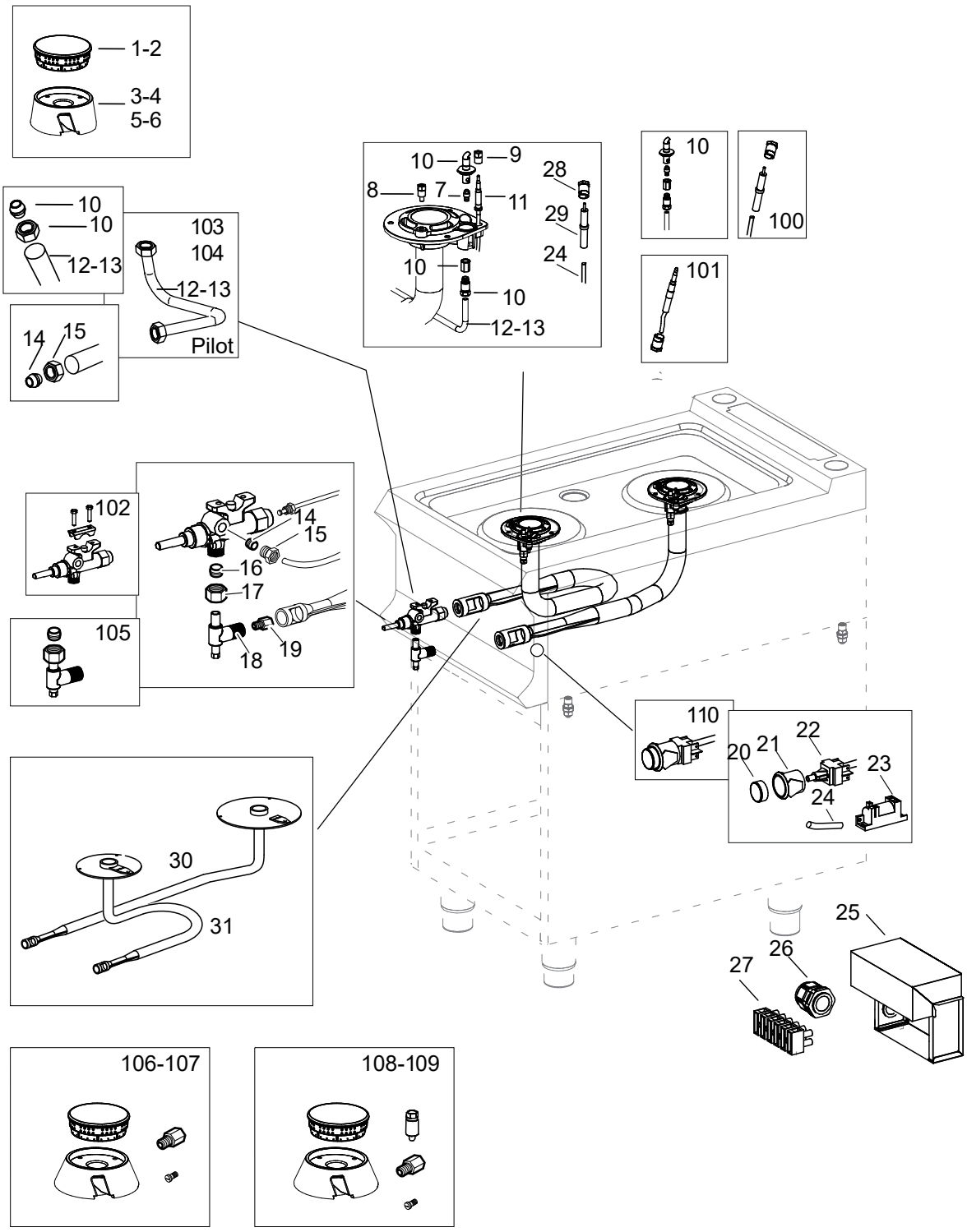
1-2
3-4
5-6
10
10
12-13
103
104
12-13
Pilot
14
15
10
9
28
8
7
11
29
24
10
10
12-13
10
100
101
102
14
15
16
17
18
19
105
110
22
20
21
23
24
30
31
25
26
27
106-107
108-109

| Nr. | Code | Title | Recommended |
|---|---|---|---|
| **1.** | 185734 | *BURNER CAP 7 KW* | ✓ |
| **3.** | 200656 | *BURNER 7KW* | |
| **7.** | INIETTORE | *SEE HANDBOOK NOZZLES* | |
| **9.** | RTCU700391 | *NUT FIXING THERMOCOUPLE* | ✓ |
| **10.** | 185732 | *PILOT BURNER FLEX 2.0* | ✓ |
| **11.** | RTCU700374 | *THERMOCOUPLE* | ✓ |
| **12.** | 200737 | *BACK BURNER PILOT PIPE* | |
| **13.** | 200738 | *FRONT BURNER PILOT PIPE* | |
| **14.** | RTCU900019 | *NUT D.6 HEIGHT 10,5 MM.* | ✓ |
| **15.** | RTCU900018 | *BICONE D.6 MM.6* | ✓ |
| **16.** | RTCU900012 | *BICONE D.10* | ✓ |
| **17.** | RTCU700297 | *NUT D.10* | ✓ |
| **18.** | 173320 | *INJECTOR SUPPORT TOP* | ✓ |
| **19.** | INIETTORE | *SEE HANDBOOK NOZZLES* | |
| **30.** | 200196 | *BACK BURNER DISTRIBUTION PIPE* | |
| **31.** | 200197 | *FRONT BURNER DISTRIBUTION PIPE* | |
| **101.** | RTCU700374-00 | *KIT THERMOCOUPLE* | ✓ |
| **102.** | RIC0004953 | *KIT GAS TAP* | ✓ |
| **103.** | RIC0004948 | *KIT FRONT PILOT PIPE FB77FEXSAE* | |
| **104.** | RIC0004949 | *KIT REAR PILOT PIPE FB77FEXSAE* | |
| **105.** | RIC0004951 | *KIT NOZZLE SUPPORT FB77FEXSAE* | |
| **106.** | KFB55S | *COMPLETE ENAMELED BURNER KIT 5,5KW* | ✓ |
| **108.** | KFB70S | *COMPLETE ENAMELLED BURNER KIT 7KW* | ✓ |