XV1093

ЭЛЕКТРИЧЕСКИЙ



Вместимость	20 GN 1/1
Расстояние	66 mm
Частота	50 / 60 Hz
Напряжение	400 V~ 3N
Мощность	29,7 kW
Размеры	866x997x1863
Вес	177 kg

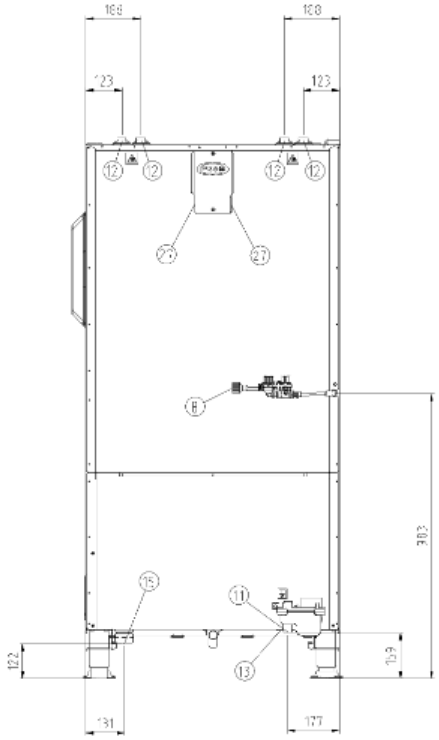
188
188
123
123
12
12
12
12
27
27
8
15
11
13
122
131
177
983

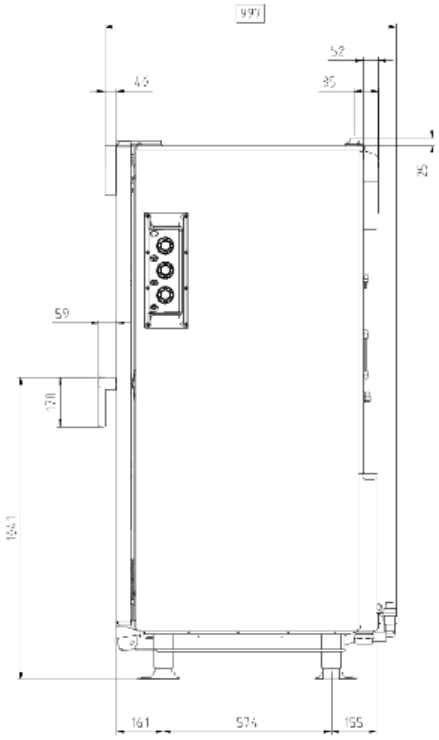
997
52
85
25
59
170
1641
161
574
155

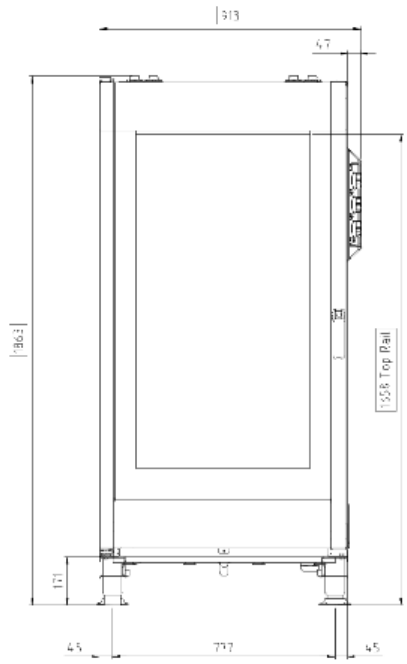
913
47
1863
1558 Top Rail
171
45
777
45

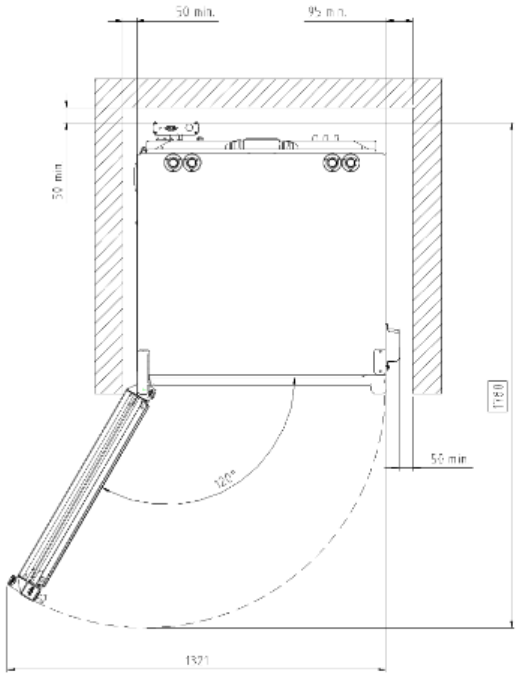
50 min.
95 min.
50 min
1180
50 min
120°
1321

■ :Standard □ :Optional - :Not available	ECO	GAS
COOKING MODES		
Convection cooking 30 °C - 260 °C	■	■
Convection cooking + Humidity 48 °C - 260 °C	■	■
Maximum pre-heating temperature 260° C	■	■
AIR DISTRIBUTION IN THE COOKING CHAMBER		
AIR.Plus technology: multiple auto-reversing fans	■	■
AIR.Plus technology: dual fan speeds	■	■
CLIMA MANAGEMENT IN THE COOKING CHAMBER		
DRY.Plus technology: rapid humidity extraction	■	■
STEAM.Plus technology: manual humidity activation	■	■
HIGH PERFORMANCE ATMOSPHERIC BURNER		
Spido.GAS™ technology: high performance straight heat exchanger pipes for a symmetric heat distribution	-	■
Spido.GAS™ technology: straight heat exchanger pipes for an easy service	-	■
PATENTED DOOR		
Door hinges made of high durability and self-lubricating techno-polymer	■	■
Reversible door, even after the installation (not for 20 GN 2/1 and 20 GN 1/1 models)	■	■
Door docking positions at 60°-120°-180°	■	■
AUXILIARY FUNCTIONS		
Protek.SAFE™ technology: maximum thermal efficiency and working safety (cool door glass and external surfaces)	■	■
Visual display of the residual cooking time	■	■
Continuous functioning «INF»	■	■
TECHNICAL DETAILS		
Rounded stainless steel AISI 304 cooking chamber for hygiene and ease of cleaning	■	■
Cavity lighting through external LED lights (only for 20 GN 2/1 and 20 GN 1/1 models)	■	-
Cavity lighting through long-life halogen lights (only for 12 GN 1/1 and 7 GN 1/1 models)	■	■
High-durability carbon fibre door lock	■	■

■ :Standard □ :Optional - :Not available	ECO	GAS
Side opening internal glass to simplify the door cleaning	■	■
Stainless steel C-shaped rack rails	■	■
Light weight – heavy duty structure using innovative materials	■	■
Safety temperature switch	■	■