Apach
COOK line

Catalogo parti di ricambio valido
dalla matricola 0000001 (31.10.2006) ad oggi (10.03.2023)

Catalogue pieces detachees
valable à partir du numero de Série n. 0000001 (31.10.2006) jusqu'à aujourd'hui (10.03.2023)

Ersatzteilkatalog
gültig ab Serien-Nr. 0000001 (31.10.2006) bis heute (10.03.2023)

Spare parts catalogue
valid from serial no. 0000001 (31.10.2006) up today (10.03.2023)

Catálogo de peças de reposição
válido do número de série 0000001 (31.10.2006) até hoje (10.03.2023)

Le informazioni sono considerate non vincolanti. Le immagini rappresentate sono puramente indicative. Il produttore si riserva il diritto di apportare modifiche in qualsiasi momento senza preavviso.

Les informations données ne sont pas contraignantes. Les images montrées sont à titre indicatif. Le producteur se réserve le droit d'apporter des modifications sans préavis.
Die im vorliegenden Dokument aufgeführten Informationen und Bilder sind unverbindlich. Der Hersteller behält sich das Recht vor, jederzeit ohne vorherige Ankündigung Änderungen vorzunehmen
Info and drawing could be slightly different from reality and they cannot be considered as compelling. Manufacturer can modify info anytime without forewarning.
As Informações e desenhoS podem estar um pouco diferente da realidade e são puramente indicativas. O fabricante pode modificar estas informações a qualquer momento sem aviso prévio.

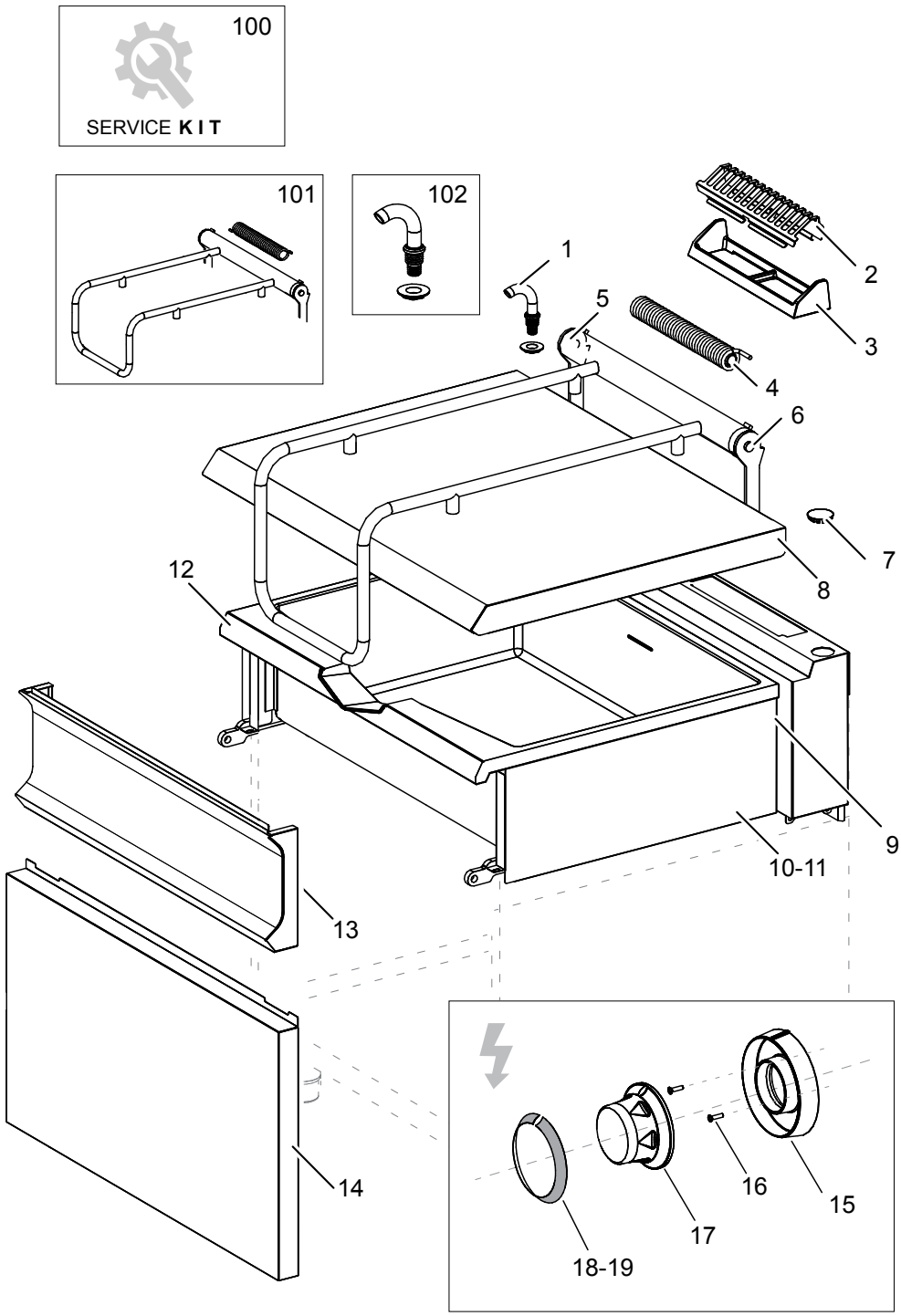
100
SERVICE KIT
101
102
1
2
3
4
5
6
7
8
9
10-11
12
13
14
15
16
17
18-19

Nr.	Code	Title	Recommended
1.	167439	*WATER EROGATOR*	
2.	202046	*CHIMNEY GRILL*	
4.	RTCP800026	*HINGE SPRING*	✓
5.	201205	*HINGE TERMINAL LEFT*	
6.	201206	*HINGE TERMINAL RIGHT*	
8.	201104	*COVER BRG78A*	
9.	201116	*BATHTUB REAR PANEL*	
10.	201114	*RIGHT TUB PANEL*	
11.	201115	*LEFT BATHTUB PANEL*	
12.	169334	*TUB*	
13.	202309	*FRONT PANEL*	
14.	201113	*FRONT PANEL*	
100.	ECS7030	*RECOMMENDED PARTS FOR BRG78A*	
101.	201125	*COMPLETE HINGE*	
102.	167439	*WATER EROGATOR*	

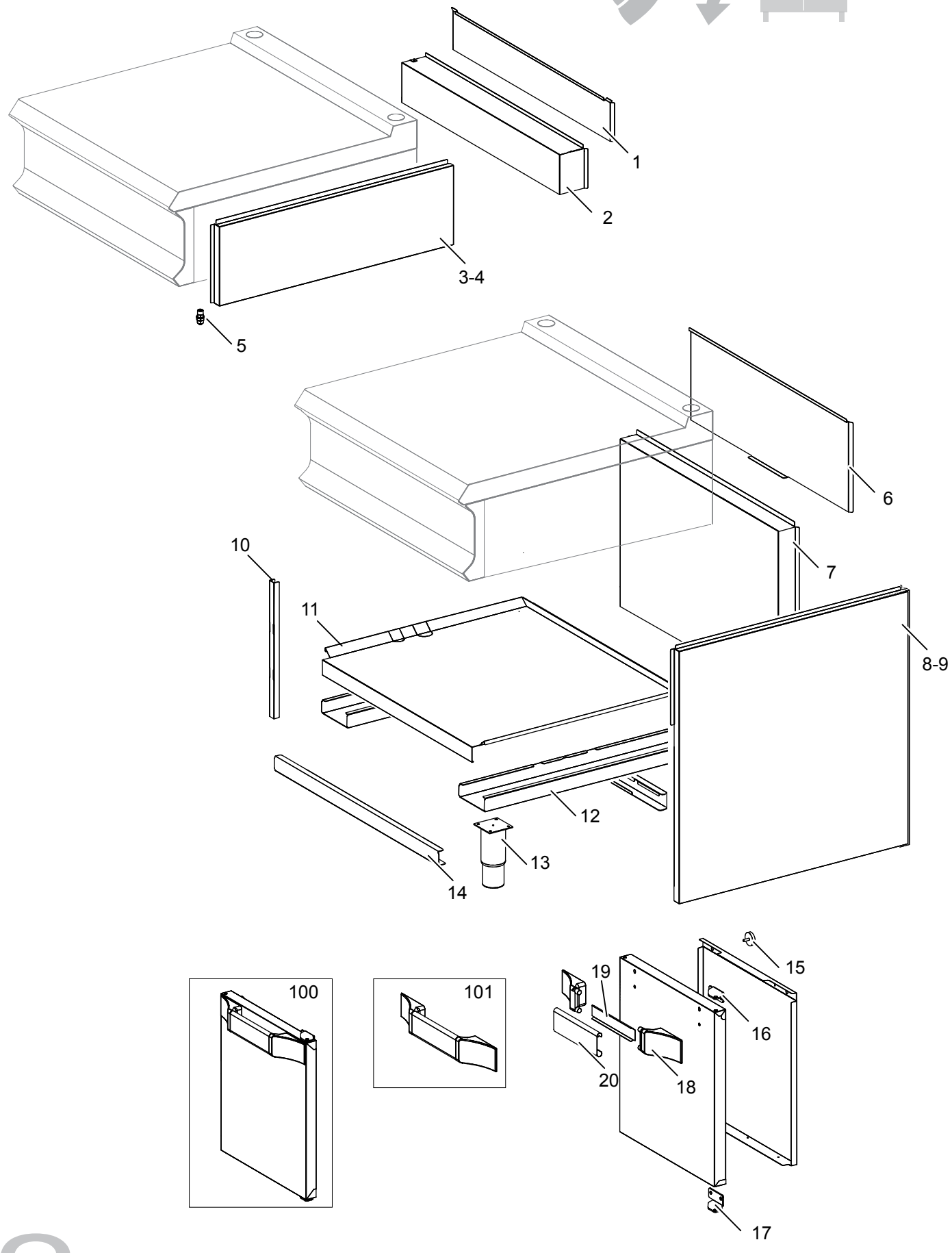
1
2
3-4
5
6
7
8-9
10
11
12
13
14
15
16
17
18
19
20
100
101

Nr.	Code	Title	Recommended
6.	201347	*BACK SIDE*	
7.	201346	*LOWER BACK SIDE*	
8.	201107	*LEFT SIDE FLANK*	
9.	201108	*RIGHT SIDE FLANK*	
12.	200847	*BASE SIDE CROSSBARS*	
13.	RTCU700277	*FOOT*	
14.	201090	*FRONT CROSSPIECE BASE*	

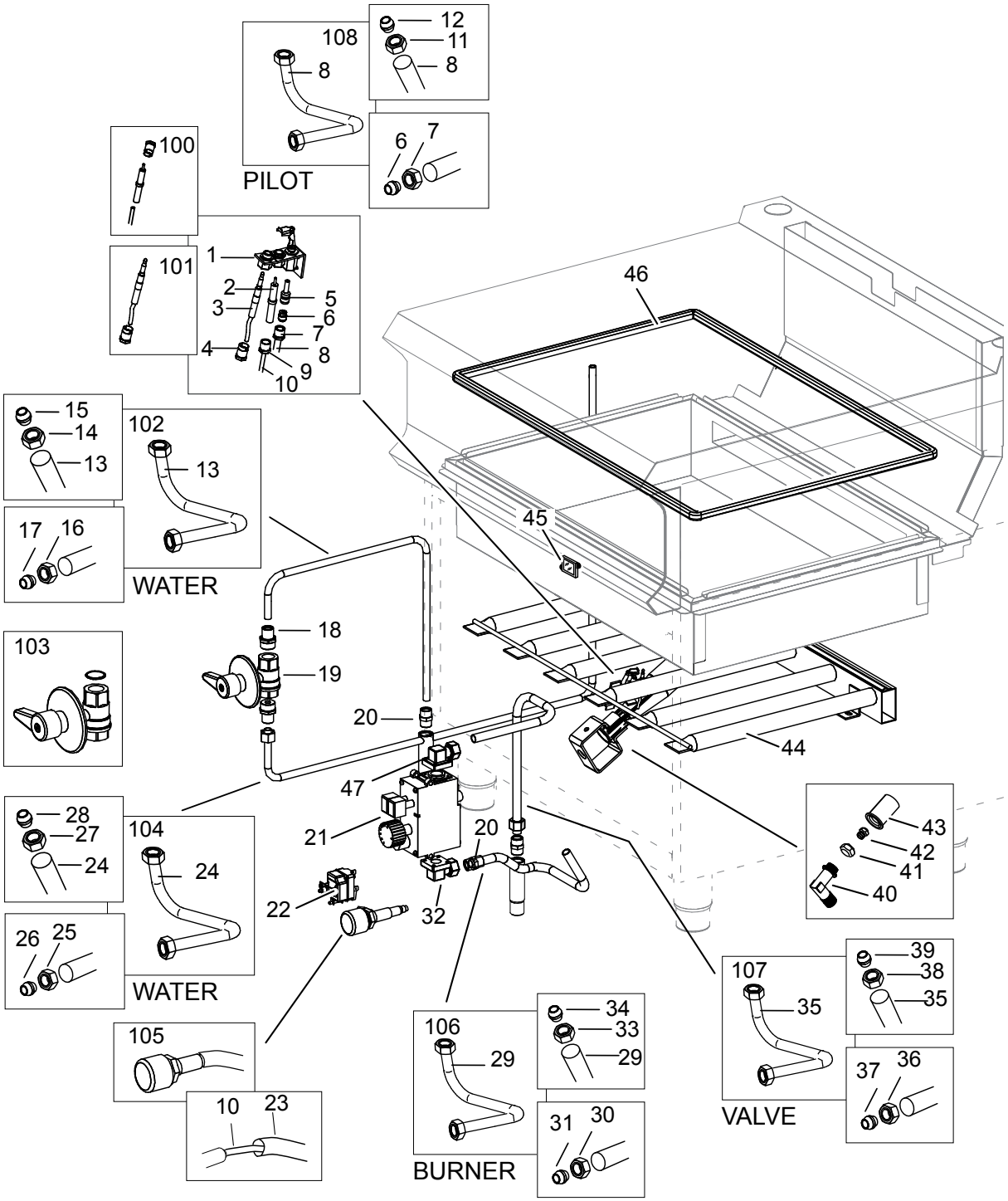
108
12
11
8
8
6
7
PILOT
100
101
1
2
3
4
5
6
7
8
9
10
46
45
15
14
13
102
13
17
16
WATER
18
19
103
20
44
47
28
27
24
104
24
21
20
43
42
41
40
22
32
26
25
WATER
107
39
38
35
35
105
106
29
34
33
29
VALVE
37
36
10
23
31
30
BURNER

Nr.	Code	Title	Recommended
1.	RTCP800034	*3 WAYS PILOT BURNER*	✓
2.	RTCP800033	*ROUND SPARK PLUG*	✓
3.	RTCU900474	*THERMOCOUPLE*	✓
4.	RTCP800038	*T/COUPLE AND PILOT PIPE NUT*	✓
5.	INIETTORE	*SEE HANDBOOK NOZZLES*	
6.	RTCU800183	*BICONE D.6 MM.11*	✓
7.	RTCU800182	*NUT AC.D.6 BLACK HEIGHT 11 MM.*	✓
8.	173367	*BURNER PILOT PIPE*	
9.	RTCU900215	*SPARK NUT*	✓
10.	RTBF800308	*IGNITION CABLE CM 150*	✓
11.	RTCU900217	*BICONIC+NUT D.6*	✓
13.	201123	*ALIMENTATION PIPE FOR WATER TAP*	
14.	RTCU900013	*NUT D.10 HEIGHT H. 14 MM*	✓
15.	RTCU900012	*BICONE D.10*	✓
16.	RTCU900013	*NUT D.10 HEIGHT H. 14 MM*	✓
17.	RTCU900012	*BICONE D.10*	✓
18.	RTCU900132	*NIPPLE 1/2"- 3/8"*	
19.	RTCU600075	*WATER FILLING TAP*	✓
20.	RTCU900391	*NIPPLE 3/8"*	
21.	RTCU900064	*GAS VALVE*	✓
22.	RTBF800076	*SAFETY THERMOSTAT*	✓
23.	168890	*TRASPARENT SILICON PIPE*	
24.	201122	*WATER OUTLET PIPE*	
25.	RTCU900013	*NUT D.10 HEIGHT H. 14 MM*	✓
26.	RTCU900012	*BICONE D.10*	✓
27.	RTCU900013	*NUT D.10 HEIGHT H. 14 MM*	✓
28.	RTCU900012	*BICONE D.10*	✓
29.	176914	*FEEDING PIPE FOR BURNER*	
30.	RTCU800181	*NUT D.12*	
31.	RTCU800195	*BICONE D.12- INJECTOR SUPPORT*	
32.	RTCU900220	*CONNECTION 3/8"*	✓
33.	RTCU800195	*BICONE D.12- INJECTOR SUPPORT*	
34.	RTCU800181	*NUT D.12*	

35.	201124	*GAS VALVE PIPE*	
36.	RTCU800181	*NUT D.12*	
37.	RTCU800195	*BICONE D.12- INJECTOR SUPPORT*	
38.	RTCU800181	*NUT D.12*	
39.	RTCU800195	*BICONE D.12- INJECTOR SUPPORT*	
40.	RTCU800180	*INJECTOR SUPPORT*	
41.	RTCU900005	*LOCK NUT*	✓
42.	INIETTORE	*SEE HANDBOOK NOZZLES*	
43.	RTCU700516	*AIR REGULATOR BURNER*	
44.	RTCU700632	*BURNER*	✓
45.	RTBF900054	*DISPLAY*	
46.	163291	*INSULATION*	
47.	RTCU900391	*NIPPLE 3/8"*	
100.	RTCP800033-00	*KIT ROUND SPARK PLUG*	✓
101.	RTCU900474-00	*KIT THERMOCOUPLE*	
102.	RIC0004974	*WATER FILLING HOSE KIT*	
103.	RTCU600075	*WATER FILLING TAP*	✓
104.	RIC0004975	*KIT WATER OUTLET PIPE*	
105.	RIC0004096	*PIEZO IGNITION + LIGHTING CABLE*	✓
106.	RIC0004976	*BURNER PIPE KIT*	
107.	RIC0004977	*VALVE PIPE KIT*	
108.	RIC0004978	*PILOT PIPE KIT*	

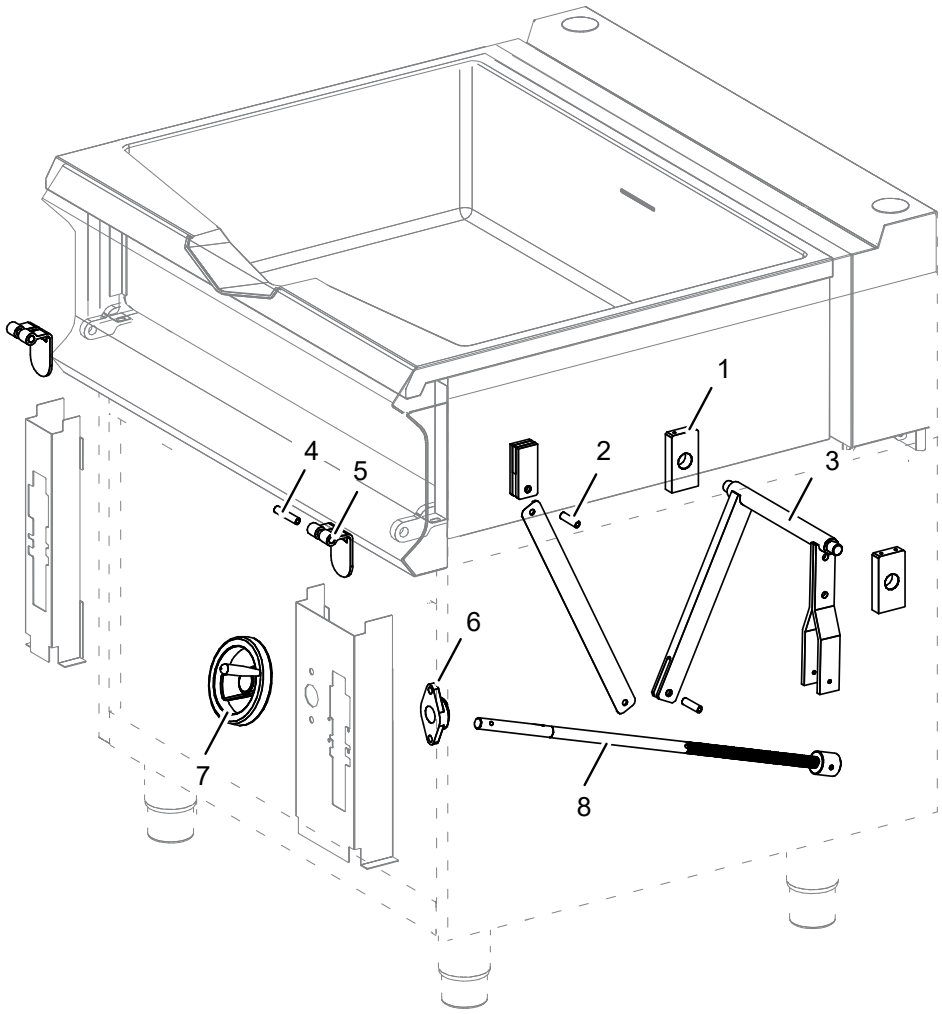
1
2
3
4
5
6
7
8

Nr.	Code	Title	Recommended
1.	RTCU700512	*TILTER SUPPORT*	
2.	RTBF900096	*EXTENSION FIXING PIN*	
3.	RTCU700509	*TILTER*	
4.	RTCU700503	*FRONT HINGE PIN*	
5.	174580	*FRONT HINGE*	
6.	RTCU700504	*BEARING*	
7.	165900	*HANDWHEEL*	✓
8.	182078	*TILTER SCREW + SLEEVE*	