Electrolux PROFESSIONAL

Warewashing
Undercounter WSC, single skin, drain pump & rinse aid dispenser, 720d/h

ITEM #

MODEL #

NAME #

SIS #

AIA #



400217 (ELA1P)

Undercounter Dishwasher with WASH-SAFE CONTROL, single skin, built-in drain pump and rinse aid dispenser, 1 phase, 720d/h

Short Form Specification

Item No.

Unit shall be Electrolux Professional Undercounter dishwasher type hot water rinsing using rack dimension of 500*500mm with WASH SAFE CONTROL. Electrical characteristics to be 230 volts single phase 50Hz operation. Washing performance is ensure by a powerful wash pump, large capacity wash tank, upper and lower revolving spray arms. Soft start wash pump to avoid accidental breakage of crystal wares. Constant rinse temperature and pressure guaranteed by built-in atmospheric boiler and rinse booster pump. Unit to feature "Wash-Safe Control" led light. Green light will indicate that all washed items have been properly rinsed. Uses 3 liters of clean water per final rinse. Three automatic cycles different types of wares. Double skin insulated door. 304 AISI stainless steel construction to include door, external panels, frame and wash tank. Electronic control with temperature display. Automatic self-cleaning cycle. The unit shall include drain pump and rinse aid dispenser pump and is equipped with electric cable.

APPROVAL:

Main Features

- Incorporated Soft Start feature to offer additional protection to more delicate items.
- Washing system endowed with rotating washing arms, high powered wash pump and large capacity boiler for professional washing.
- 4 second (variable) pause after washing and before rinsing ensures that no drops of unclean water will fall on the clean items at the end of the rinsing cycle.
- Fully automatic self-cleaning cycle avoids the risk of bacteria proliferation.
- Simple control panel with digital display allows on-site personalization of washing and rinsing cycle times and temperatures as well as precise rinse aid and detergent quantities to suit customer's needs.
- Simple service from the front.
- IPx4 water protection.
- Pre-arranged to accept external dispensers.
- Pre-arrangement for HACCP system implementation and Energy Management device.
- An effective rinse system uses only 3 liters of clean hot water per basket for lower running costs.
- Built-in rinse aid dispenser with automatic initial and continuous cycle loading for perfect result while minimizing service and maintenance needs.
- Digital read-out keeps operator informed as to temperatures.
- State-of-the-art electronic controls with built-in programming, self-diagnostics for serviceability and automatic interior self-cleaning cycle.
- Unique temperature interlock guarantees required temperatures in both the wash and final rinse in case of emergency cold water feeding.
- Constant temperature of 84 °C thoughout the rinsing cycle regardless of the network's water pressure and temperature.
- Green light of "WASH SAFE CONTROL" confirms that items have been rinsed properly.
- High efficiency air gap (class A) in water inlet circuit to avoid water being siphoned back into the network as a result of a sudden drop in main pressures.
- Built-in atmospheric boiler sized to raise incoming water to 84 °C minimum for sanitizing rinse. No external booster is required.
- Washing capacity of 40 baskets or 720 dishes per hour.

Construction

- Unit to feature smooth surfaces to facilitate cleaning.
- Front and side panels, door and wash tank made in heavy duty anti-corrosive AISI 304 stainless steel.
- 304 stainless steel boiler with higher welding protection to increase resistance to corrosion.
- PVC water supply hose with metal connections resistant to high water pressure.
- Completely closed on the back by a cover plate.

Electrolux PROFESSIONAL
Undercounter WSC, single skin, drain pump & rinse aid dispenser, 720d/h
Warewashing

- Element protection from dry fire and low water.
- Interchangeable wash/rinse arms screw out for simple clean up.
- The boiler drain facilitates the evacuation of stagnant water after long periods of inactivity to ensure a higher level of hygiene.
- Double skin insulated door to reduce heat dispersion.
- Large wash tank with round corners and no pipes to avoid dirt built-up.
- Incorporated drain pump to control water level in wash tank draining.
- Single phase electrical connection.
- Unit to include drain pump and rinse aid dispenser pump.

Included Accessories

• 1 of Yellow cutlery container	PNC 864242
• 1 of Basket for 18 dinner plates - yellow	PNC 867002

Optional Accessories

• 12lt external manual water softener	PNC 860412	❑
• 8lt external automatic water softener	PNC 860413	❑
• Stand for undercounter dishwasher	PNC 860418	❑
• External detergent level probe kit	PNC 864004	❑
• External rinse aid level probe kit	PNC 864005	❑
• Kit 4 flanged feet for undecounter dishwashers	PNC 864009	❑
• Stainless steel inlet hose kit	PNC 864016	❑
• Filter for partial demineralization	PNC 864017	❑
• Kit to measure total and partial water hardness	PNC 864050	❑
• Detergent dosing kit	PNC 864218	❑
• Stainless steel tank filter for single skin undercounter	PNC 864222	❑
• Yellow cutlery container	PNC 864242	❑
• Reverse osmosis filter for single tank Dishwasher with atmosphere boiler	PNC 864388	❑
• Pressure reducer for single tank dishwasher	PNC 864461	❑
• Kit 4 plastic boxes for cutlery - yellow	PNC 865574	❑
• Basket for 18 dinner plates - yellow	PNC 867002	❑
• Basket for 5 trays 530x325 mm - red, for undercounter (top level), utensil dishwashers, hood type, rack type	PNC 867006	❑
• Basket for 48 small cups or 24 cups - blue	PNC 867007	❑
• Cover rack for small and light items (500x500 baskets)	PNC 867016	❑

The company reserves the right to make modifications to the products without prior notice. All information correct at time of printing.

Warewashing
Undercounter WSC, single skin, drain pump & rinse aid dispenser, 720d/h

Front

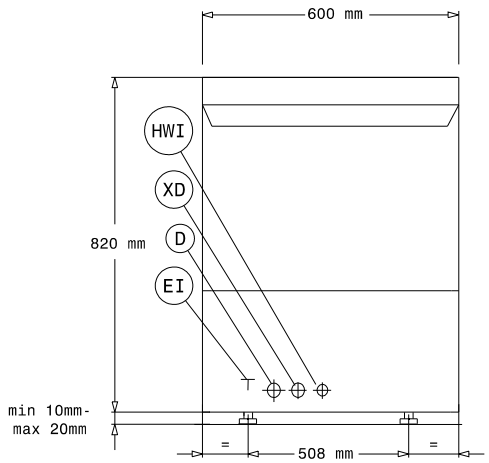

Side

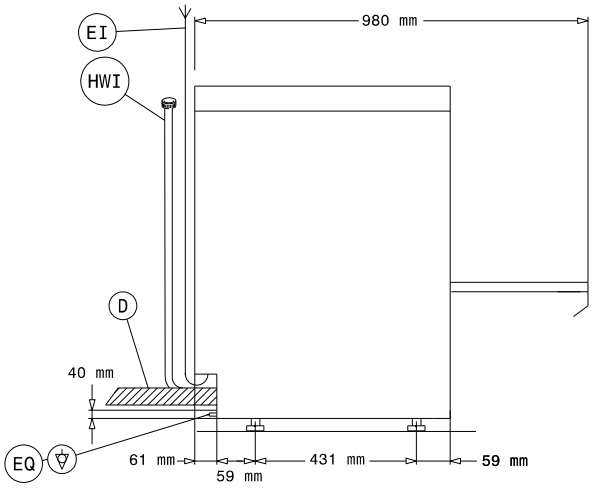

D = Drain
EI = Electrical inlet (power)
EO = Electrical Outlet
HWI = Hot water inlet
XR = Rinse aid connection

Top

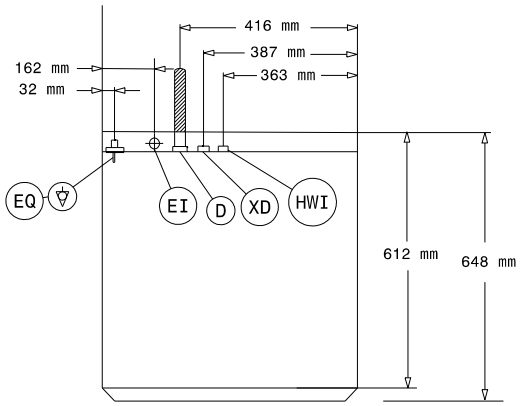

Electric

Supply voltage:	
400217 (ELA1P)	230 V/1 ph/50 Hz
Convertible to:	
Default Installed Power:	3.65 kW
Boiler heating elements:	2,8 kW
Tank heating elements:	2 kW
Wash pump size:	0.736 kW

Water:

Pressure, bar min/max:	0.5-7 bar
Water supply temperature*:	50 °C
Drain line size:	40 mm
Inlet Water supply pressure:	7 - 102 psi (0.5 - 7 bar)
Washing tank capacity (lt):	33
Water consumption per cycle (lt):	3
Boiler Capacity (lt):	5,8

Key Information:

Baskets per hour*:	40
Dishes per hour:	720
Working cycles time (sec.):	90/120/240
Wash temperature:	55-65°C
Cell dimensions - width:	500 mm
Cell dimensions - depth:	500 mm
Cell dimensions - height:	330 mm
Rinse temperature:	84 °C
External dimensions, Width:	600 mm
External dimensions, Height:	820 mm
External dimensions, Depth:	648 mm
Packaging size (WxDxH):	740x670x1020 mm
Noise level:	<70 dBA

The company reserves the right to make modifications to the products without prior notice. All information correct at time of printing.

2021.07.20