Electrolux PROFESSIONAL

Blast Chillers-Freezers CW
Blast Chiller-Freezer Crosswise - 64/56 kg - (R452A)

ITEM #

MODEL #

NAME #

SIS #

AIA #



727899 (RBF201)

Blast Chiller & Freezer 64/56kg, compatible with 20x1/1GN crosswise Oven - R452A

Short Form Specification

Item No.

- Blast chiller/freezer with digital temperature and time display
- For 20 GN 1/1 or 600x400 mm trays
- Load capacity: chilling 56 kg (UK guidelines); freezing 64 kg (UK guidelines)
- Single sensor core probe
- Operating air temperature: +3 -41°C
- Automatic and manual defrosting
- Blast chilling real residual time estimation (A.R.T.E.)
- Turbo cooling function
- Specific cycles for ice cream
- Evaporator with antirust protection
- HACCP and Service alarms with data logging
- Main components in 304 AISI stainless steel
- Internal rounded corners and drain
- Cyclopentane insulation (HCFC, CFC and HFC free)
- Built-in refrigeration unit
- R452a refrigerant gas (HCFC and CFC free)
- Performance guaranteed at ambient temperatures of 40°C

Main Features

- Blast Chilling cycle: 64 kg from 90°C up to 3°C in less than 90 minutes.
- Blast Freezing cycle: 56 kg from 90°C up to -18°C in less than 240 min.
- Soft Chilling (air temperature -2°C).
- Freezing (air temperature -36°C)
- Hard Chilling (air temperature -20°C).
- Performance guaranteed at ambient temperatures of +40°C.
- Holding at +3 °C for chilling or -22 °C for freezing, automatically activated at the end of each cycle, to save energy and maintain the target temperature (manual activation is also possible).
- Turbo cooling: chiller works continuously at the desired temperature; ideal for continuous production.
- Control unit provides two large displays to read out: time, core temperature, cycle countdown, alarms, service information.
- Two customizable cycles (P1 & P2) for each operating mode, allowing to set the time and air temperature. These programs can be converted into ice-cream specialized cycles (shape maintainance and holding).
- All information related to the different operating models are recorded: date, time, cycle, core temperature, holding temperature, HACCP accordance.
- Single sensor core probe as standard.
- Remaining time estimation for probe-driven cycles based on artificial intelligence techniques (ARTE) for an easier planning of the activities.
- Automatic and manual defrosting.

Construction

- Environmentally friendly: R452a as refrigerant gas.
- High density polyurethane insulation, 60 mm tickness, HCFC free.
- 304 AISI stainless steel construction throughout.
- Seamless hygienic inner cell with all rounded corners for easy cleaning.
- Swing hinged front panel for easy service access to main components.
- Ventilator swinging hinged panel for access to the evaporator for cleaning.
- Waste water can be plumbed into drain, but can also be collected in an optional waste container.
- Built-in refrigeration unit.
- Removable magnetic door gasket with hygienic design.

APPROVAL:

Electrolux PROFESSIONAL
Blast Chillers-Freezers CW
Blast Chiller-Freezer Crosswise - 64/56 kg - (R452A)

Included Accessories

- 1 of 1 single-sensor probe for blast chiller and blast chiller&freezers PNC 880213
- 1 of Removable tray support rack for 20 GN 1/1 PNC 881010

Optional Accessories

- Connectivity kit for AOC/EasyLine and CW Blast Chillers/Blast Chiller Freezers (ECAP) PNC 880183 ❑
- 1 single-sensor probe for blast chiller and blast chiller&freezers PNC 880213 ❑
- Rilsan grid 600x400mm PNC 880864 ❑
- Removable tray support rack for 20 GN 1/1 PNC 881010 ❑
- Plastic coated grid, 1/1GN PNC 881061 ❑
- Rack rails for vertical blast chiller and blast chiller&freezer PNC 881182 ❑
- Pair of 1/1GN AISI 304 stainless steel grids PNC 921101 ❑
- Trolley for 20x1/1GN roll-in rack PNC 922132 ❑
- KIT HACCP EKIS PNC 922166 ❑
- 60mm pitch roll-in rack for 20x1/1GN (included with the oven) PNC 922203 ❑
- 80mm pitch roll-in rack for 20x1/1GN PNC 922205 ❑

The company reserves the right to make modifications to the products without prior notice. All information correct at time of printing.

Blast Chillers-Freezers CW
Blast Chiller-Freezer Crosswise - 64/56 kg - (R452A)

Front

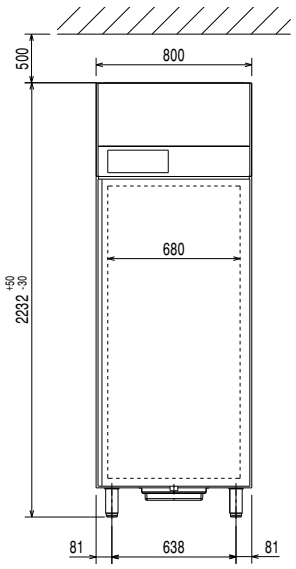

Side

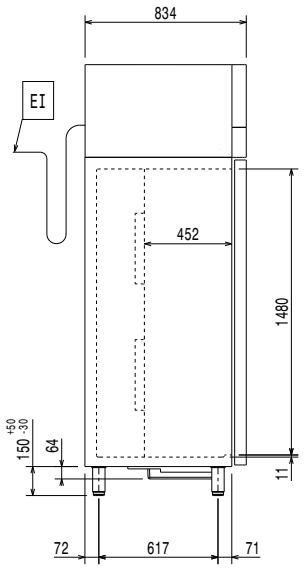

EI = Electrical inlet (power)

Top

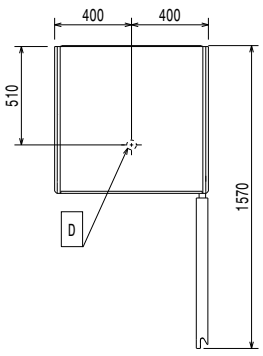

Electric

Supply voltage:	
727899 (RBF201)	380-415 V/3N ph/50 Hz
Electrical power max.:	4.4 kW
Circuit breaker required	

Installation:

Clearance:	5 cm on sides and back.

Please see and follow detailed installation instructions provided with the unit

Capacity:

GN:	20 - 1/1 containers

Key Information:

External dimensions, Width:	800 mm
External dimensions, Height:	2230 mm
External dimensions, Depth:	835 mm
Net weight:	235 kg
Shipping weight:	268 kg
Shipping volume:	1.83 m³

Refrigeration Data

Refrigerant type:	R452A
GWP Index:	2141
Refrigeration power:	9054 W
Refrigeration power at evaporation temperature:	-5 °C
Refrigerant weight:	2400 g

Product Information (EN17032 – Commission Regulation EU 2015/1095)

Energy consumption, cycle (chilling):	0.073 kWh/kg
Chilling Cycle Time (+65°C to +10°C):	106 min
Full load capacity (chilling):	95 kg
Energy consumption, cycle (freezing):	0.222 kWh/kg
Freezing Cycle Time (+65°C to -18°C):	263 min
Full load capacity (freezing):	65 kg

The company reserves the right to make modifications to the products without prior notice. All information correct at time of printing.

2021.07.21