

CANCAN®

• SINCE 1958 •

www.cancan.com.tr

“65 Years of the Experience“



CANCAN production center was established in 1958 by Salih Özüuğurlu in Ankara, specializing initially in the repair of orange juicers and kitchen appliances, and later expanding into machine manufacturing to serve the food industry. In 1984, Tunç Özüuğurlu took over the management as the second-generation representative and continues to lead the business. In 1994, he obtained the trademark registration for the company. Located in the İvedik Organized Industrial Zone in Ankara, the company has been continuing its production in Sakarya since the year 2000.

CANCAN, placing great importance on exports, continues to explore new markets by directly exporting 50% of its production to 55 countries across 5 continents.

Prioritizing research and development and allocating a significant portion of its annual turnover to R&D activities, CANCAN competes with global brands with its innovative equipment. The primary goal is to become a sought-after brand with world-class quality. With its product variety and quality, CANCAN specializes in the industrial kitchen sector, serving establishments such as hotels, restaurants, cafes, bakeries, schools, and factory kitchens.

Operating in its 5,500 square meter production facility in Sakarya today, CANCAN manufactures manual and automatic citrus juicers for oranges, pomegranates, grapefruits, and lemons, as well as washing equipment, manual and electric can openers, fruit and vegetable slicing machines, and peeling machines. The production involves shaping metal through processes such as aluminum casting, plastic injection, painting, mold production, manufacturing, and assembly, all done using CNC lathes and mills under one roof for all products.

INDEX

JUICING EQUIPMENT

Manual Fruit Juicers

0101 Domestic Type Manual Fruit Juicer 7
0102 Professional Type Manual Fruit Juicer 8
0103 Pomegranate Type Manual Fruit Juicer 9

Automatic Orange Juicers

0203 38 With Glass Automatic Orange Juicer 11
0204-1101 38 With Tank And Stand Automatic Orange Juicer 12
0205-1101 38 Fresh With Stand Automatic Orange Juicer 13
0205-1107 38 Fresh & Stand With Double Trash Can 14
0206 28 Cafe Type Automatic Orange Juicer 15
0208 38 Cooler Model Automatic Orange Juicer 16
Automatic Juicers Technical Information 17-18-19

Automatic Pomegranate Juicers

0601 32 With Glass Automatic Pomegranate Juicer 21
0602-1101 32 Automatic Pomegranate Juicer With Juice Tank & Stand 22
0603 Automatic Pomegranate Press 23

PREPARATION EQUIPMENT

1301 Vegetable Cutter 25
1302 Tomato Slicer 26
1306 Coring Spoon 27
1307 Walnut Opener 28
1308 Small Size Tomato Slicer 29
1313 Cheese Slicer 30
1316 Lemon Cutter 31
1319 Onion Flowering Cutter 32
1320 Mandoline Slicer 33
1321 Manual Potato Cutter 34
1323 Vegetable & Fruit Peeler 35
1324 Manual Melon Cutting Tool 36
1332 Manual Watermelon Cutting Tool 37
1327 Manual Watermelon Slicer 38
1325 Leaf Cutter 39
1326 Manual Pineapple Slicer 40
0801-1104 Pineapple Peeler Machine With Stand 41
0810 Pineapple Guillotine Cutter 42
1423 Pineapple Trio 43

1315 Fruit Cutter 44
1318 Vertical Tomato Slicer 45
1317 Combine Slicer 46
1330 Pizza Slicer 47
1305 Pneumatic Potato Cutter 48
1309 Pneumatic Melon Cutter 49
1310 Pneumatic Watermelon Cutter 50
0809 Pneumatic Pineapple Peeler Machine (With Stand) 51
1701 Bread Oiler Tool 52
Electrical & Manual Can Openers
0702 Professional Type Electrical Can Opener Circle Cut 54
0703 Professional Type Electrical Can Opener Circle-Square Cut 55
0302 Professional Type Manual Can Openers 56
0303 Diamond Type Manual Can Openers 57

WASHING EQUIPMENT

0501 MT01 Sink Mounted Pre-Rinse Faucet 59
0502 MT02 Sink Mounted Pre-Rinse Faucet With Intermediate Tap 60
0503 MT03 Wall Mounted Pre-Rinse Faucet 61
0504 MT04 Wall Mounted Pre-Rinse Faucet With Intermediate Tap 62
0505 MT05 Mini Size Sink Mounted Pre-Rinse Faucet 63
0506 MT06 Mini Size Sink Mounted Pre-Rinse Faucet With Intermediate Tap 64
Deluxe Series
0507 MT01 Deluxe Sink Mounted Pre-Rinse Faucet 66
0508 MT02 Deluxe Sink Mounted Pre-Rinse Faucet With Intermediate Tap 67
0512 MT03 Deluxe Wall Mounted Pre-Rinse Faucet 68
0513 MT04 Deluxe Wall Mounted Pre-Rinse Faucet With Intermediate Tap 69
0509 MT05 Deluxe Mini Size Sink Mounted Pre-Rinse Faucet 70
0510 MT06 Deluxe Mini Size Sink Mounted Pre-Rinse Faucet With Intermediate Tap 71
Sink Mount Pot Filler
0511 Sink Mount Pot Filler 73
Retractable Models
0905 Retractable Pre-Rinse Faucet With Reel Hose (2 MT) 75
0901 Retractable Pre-Rinse Faucet With Reel Hose (6 MT) 76
0902 Retractable Pre-Rinse Faucet With Reel Hose (10 MT) 77
0903 Retractable Pre-Rinse Faucet With Reel Hose (12 MT) 78
0904 Retractable Pre-Rinse Faucet With Reel Hose (15 MT) 79
Industrial Type Pot Washing Machine
1001 Industrial Type Pot Washing Machine 81

JUICING EQUIPMENT

MANUAL FRUIT JUICERS

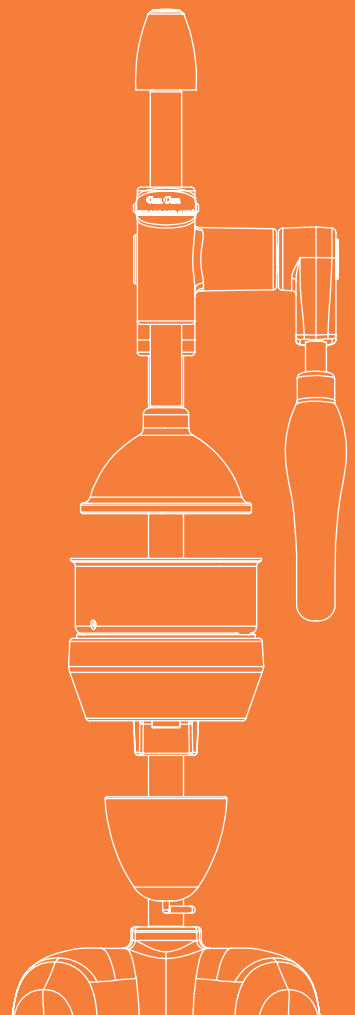

0101 DOMESTIC TYPE MANUAL FRUIT JUICER

It has a locking system for the strainer.

The diameter of the bowl, strainer, and upperpress is 10 cm.

This small size is designed for domestic use.



TECHNICAL SPECIFICATIONS

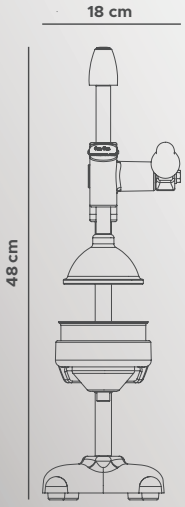

Product Code	:	0101
Weight	:	3,85 kg
Width	:	18 cm
Depth	:	28 cm
Height	:	48 cm

0102 PROFESSIONAL TYPE MANUAL FRUIT JUICER

It has a locking system both for strainer and bowl.

The diameter of the bowl, strainer and upperpress is 10 cm.

There is a drip cup that prevents the juice from flowing out between juicing process.

It is designed to be used in places such as cafes, buffets and restaurants.



TECHNICAL SPECIFICATIONS

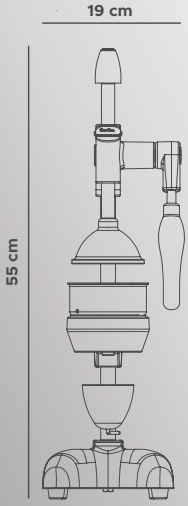

Product Code	:	0102
Weight	:	4,5 kg
Width	:	19 cm
Depth	:	30 cm
Height	:	55 cm

0103 POMEGRANATE TYPE MANUAL FRUIT JUICER

It has a locking system for both strainer and bowl.

In order to squeeze large pomegranates more easily, the bowl, strainer and top press are designed with a diameter of 11.5 cm.

There is a drip cup that prevents the juice from flowing out between juicing process.

The handle is designed to provide personal comfort thanks to its tightening grip.

It is designed to be used in places such as cafes, buffets and restaurants.



TECHNICAL SPECIFICATIONS

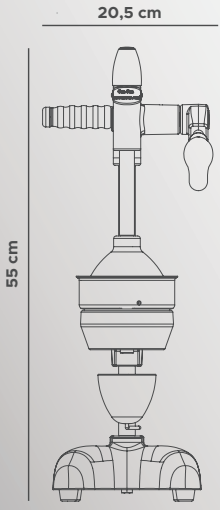

Product Code	:	0103
Weight	:	4,75 kg
Width	:	20,5 cm
Depth	:	30 cm
Height	:	55 cm

AUTOMATIC ORANGE JUICERS

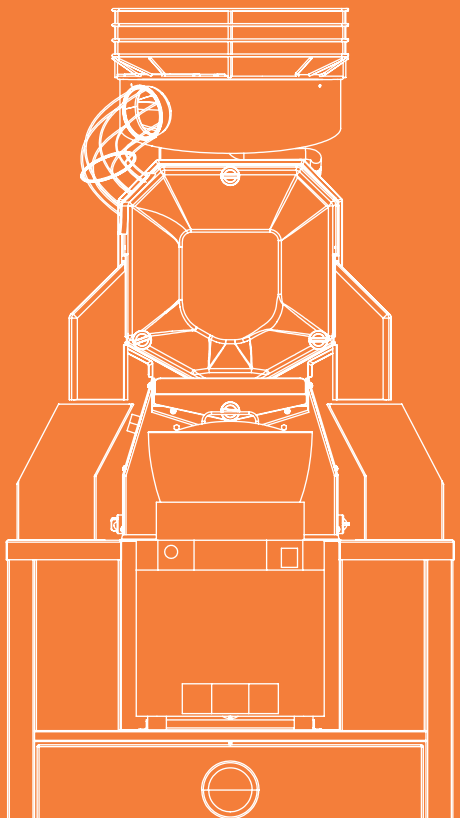

0203 38 WITH GLASS AUTOMATIC ORANGE JUICER

The 38 with Glass Automatic Orange Juicer is used in various places like hotels, restaurants, markets, and more.

It's designed for juicing citrus fruits such as oranges, tangerines, and lemons in public settings.

It can squeeze 38 oranges per minute and has a 15 kg fruit storage chamber.

It uses a turning disc to rotate the oranges and make them fall into the feeding wire one by one.



TECHNICAL SPECIFICATIONS

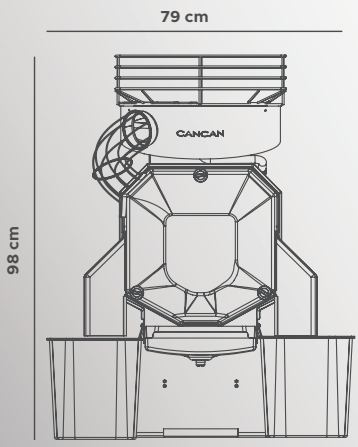

Technical Specifications	:	0203
Orange Squeezing Capacity	:	38 Pcs/min.
Orange Diameter	:	Ø 6 - 8 cm
Orange Basket	:	15 kg
Motor	:	0,37 kw
Consumption	:	2,5 A
Power	:	220 - 230 V
Frequency	:	50 - 60 Hz
Weight	:	76 kg
Width	:	79 cm
Depth	:	58 cm
Height	:	98 cm

0204 - 1101 38 WITH TANK AND STAND

AUTOMATIC ORANGE JUICER

The 38 Automatic Orange Juicer with Tank is used in various places like hotels, restaurants, markets, malls, hospitals, dormitories, cafes, and universities.

It's designed for juicing citrus fruits such as oranges, tangerines, and lemons in public areas, squeezing 38 oranges per minute.

It features a 15 kg fruit storage chamber and a turning disc to rotate and feed oranges one by one.

It also has a 5-liter juice storage tank and a mobile stand with a 70 kg peel waste container.



TECHNICAL SPECIFICATIONS

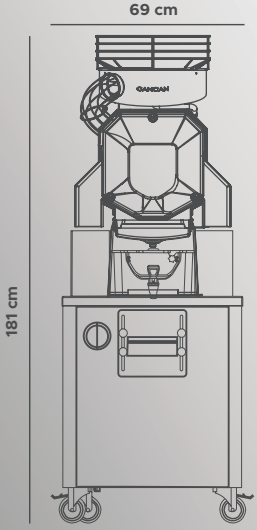

Technical Specifications	:	0204 - 1101
Orange Squeezing Capacity	:	38 Pcs/min.
Orange Diameter	:	Ø 6 - 8 cm
Orange Basket	:	15 kg
Motor	:	0,37 kw
Consumption	:	2,5 A
Power	:	220 - 230 V
Frequency	:	50 - 60 Hz
Weight	:	117 kg
Width	:	69 cm
Depth	:	70 cm
Height	:	181 cm

***Mobile Stand is optional.**

0205-1101 38 FRESH WITH STAND
AUTOMATIC ORANGE JUICER



The 38 Fresh Model Automatic Orange Juicer with a self-service tap is suitable for various places like hotels, restaurants, markets, malls, hospitals, dormitories, cafes, and universities.

It's designed for juicing citrus fruits like oranges, tangerines, and lemons in public areas, squeezing 38 oranges per minute.

It features a 15 kg fruit storage chamber and a turning disc to feed oranges one by one.

The mobile stand also has a 70 kg peel waste container.

TECHNICAL SPECIFICATIONS

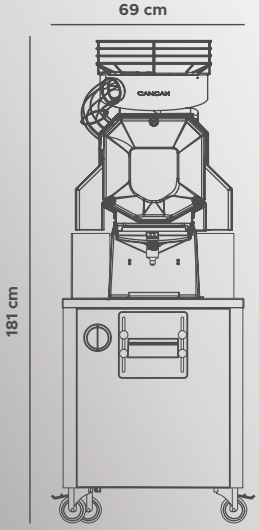

Technical Specifications	:	0205 - 1101
Orange Squeezing Capacity	:	38 Pcs/min.
Orange Diameter	:	Ø 6 - 8 cm
Orange Basket	:	15 kg
Motor	:	0,37 kw
Consumption	:	2,5 A
Power	:	220 - 230 V
Frequency	:	50 - 60 Hz
Weight	:	117 kg
Width	:	69 cm
Depth	:	70 cm
Height	:	181 cm

*Mobile Stand is optional.

0205-1107 38 FRESH & STAND WITH DOUBLE TRASH CAN



The Automatic Orange Juicer with a self-service tap is perfect for hotels, restaurants, markets, malls, hospitals, dorms, cafes, and universities.

It's designed to quickly squeeze the juice from oranges, tangerines, and lemons in public places.

It can squeeze 38 oranges per minute and can hold up to 28 kg of fruit.

Thanks to a turning disc, it feeds oranges one by one.

The mobile stand has two 70 kg peel waste containers for easy disposal, and it comes with an easy-to-clean stainless strainer.

TECHNICAL SPECIFICATIONS

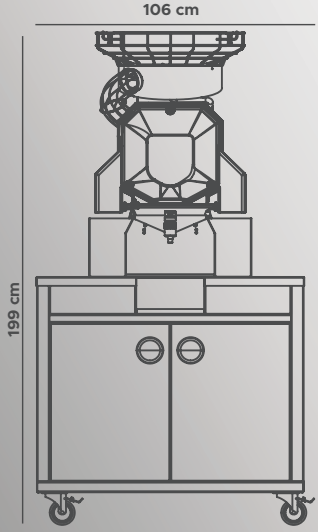

Technical Specifications	:	0205-1107
Orange Squeezing Capacity	:	38 Pcs/min.
Orange Diameter	:	Ø 6 - 8 cm
Orange Basket	:	28 kg
Motor	:	0,37 kw
Consumption	:	2,5 A
Power	:	220 - 230 V
Frequency	:	50 - 60 Hz
Weight	:	137 kg
Width	:	106 cm
Depth	:	94 cm
Height	:	199 cm

*** Mobile Stand is Optional.**

0206 28 CAFE TYPE AUTOMATIC ORANGE JUICER

The Cafe-type Automatic Orange Juicer is ideal for a wide range of establishments, including hotels, restaurants, markets, shopping malls, hospitals, student dormitories, cafes, and universities.

Designed for juicing citrus fruits like oranges, tangerines, and lemons in public settings, it has a capacity to squeeze 28 oranges per minute.

This machine features a manually fed orange hopper that can store up to 7 kg of fruit.



TECHNICAL SPECIFICATIONS

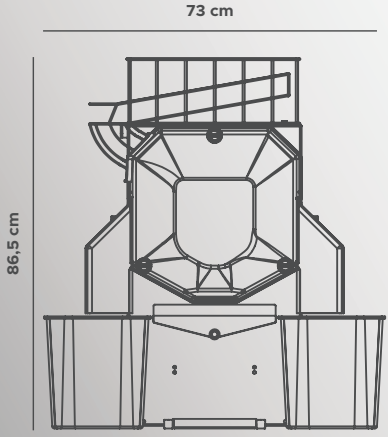

Technical Specifications	:	0206
Orange Squeezing Capacity	:	28 Pcs/min.
Orange Diameter	:	Ø 6 - 8 cm
Orange Basket	:	7 kg
Motor	:	0,25 kw
Consumption	:	2,5 A
Power	:	220 - 230 V
Frequency	:	50 - 60 Hz
Weight	:	45 kg
Width	:	73 cm
Depth	:	41,5 cm
Height	:	86,5 cm

0208 38 COOLER MODEL

AUTOMATIC ORANGE JUICER

The 38 Cooler Model Automatic Orange Juicer with a refrigerated tank is ideal for use in a variety of locations, including hotels, restaurants, markets, shopping malls, hospitals, student dormitories, cafes, and universities.

This machine is designed for efficiently extracting juice from citrus fruits such as oranges, tangerines, and lemons in public settings.

It boasts a remarkable capacity, squeezing 38 oranges per minute, and features a 15 kg fruit storage chamber.

With the help of a turning disc, it rotates the oranges, ensuring they fall into the feeding wire one by one.

The mobile stand is equipped with a 70 kg peel waste container.



TECHNICAL SPECIFICATIONS

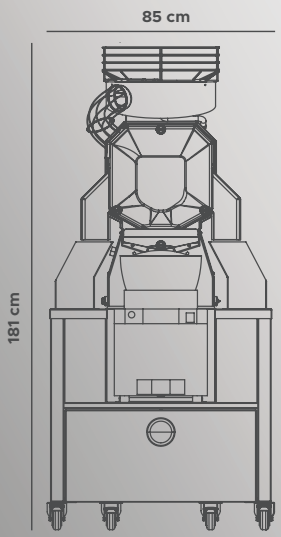

Technical Specifications	:	0208
Orange Squeezing Capacity	:	38 Pcs/min.
Orange Diameter	:	Ø 6 - 8 cm
Orange Basket	:	15 kg
Motor	:	0,37 kw
Consumption	:	2,5 A
Power	:	220 - 230 V
Frequency	:	50 - 60 Hz
Weight	:	149 kg
Width	:	85 cm
Depth	:	81 cm
Height	:	181 cm

CANCAN • SINCE 1958 •



Fruit Storage Basket
Standard capacity of 15 kg and optional capacity of 28 kg fruit strage.



Rotating Disk
A system that makes the oranges falling into the feeding wire one by rotating the oranges.



Large Volume Trash Can
Pulp storage reservoir with up to 70 kg capacity.



Large Feeding Wire
Diameter of 10 cm side feeding wire.



Cooler System
Cooler Tank with a bottom cooling system that cools the juice equally until the last drop and with a juice storage capacity of 7 liters.



Cleaning Pipe
A system that cleans inside of the disk easily thanks to the pipe under the disk for a hygienic Squeezing Process.



Front Cover with a Safety Switch
System that prevents operating of the machine while the front cover is open thanks to the safety switch, located on the front cover made of durable polycarbonate.



Double Trash Can
Double Trash Can with a capacity each of 70 kg.



Juice Tank
5 lt capacity juice tank according to food standards.



Fruit Feeding Wire
6 to 8 oranges storage capacity in the feeding wire.



Self Service System
System that starts the squeezing process when tap is pressed and stops when tap is released with the self service sensor tap made from AISI 304 stainless steel.

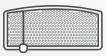

Easily Cleanable Stainless Strainer
All stainless strainer where you can clean the fruit pulp easily that strainer by pulling it right or left with one single movement.

REFERENCE CHART

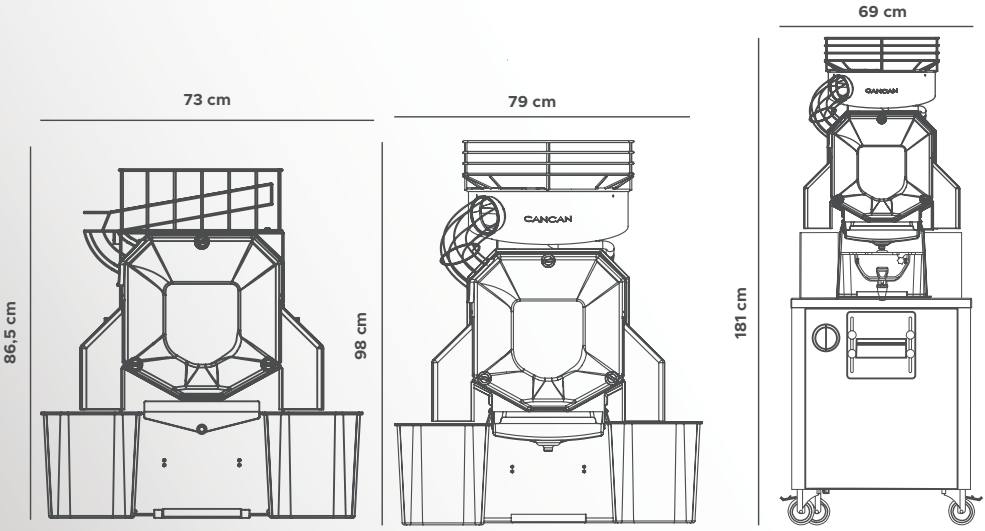

Technical Specifications : 0206	
Orange Squeezing Capacity	: 28 Pcs/ min.
Orange Diameter	: Ø 6 - 8 cm
Orange Basket	: 7 kg
Motor	: 0,25 kw
Consumption	: 2,5 A
Power	: 220 - 230 V
Frequency	: 50 - 60 Hz
Weight	: 45 kg
Width	: 73 cm
Depth	: 41,5 cm
Height	: 86,5 cm

Technical Specifications : 0203	
Orange Squeezing Capacity	: 38 Pcs/ min.
Orange Diameter	: Ø 6 - 8 cm
Orange Basket	: 15 kg
Motor	: 0,37 kw
Consumption	: 2,5 A
Power	: 220 - 230 V
Frequency	: 50 - 60 Hz
Weight	: 76 kg
Width	: 79 cm
Depth	: 58 cm
Height	: 98 cm

Technical Specifications : 0204 - 1101	
Orange Squeezing Capacity	: 38 Pcs/ min.
Orange Diameter	: Ø 6 - 8 cm
Orange Basket	: 15 kg
Motor	: 0,37 kw
Consumption	: 2,5 A
Power	: 220 - 230 V
Frequency	: 50 - 60 Hz
Weight	: 117 kg
Width	: 69 cm
Depth	: 70 cm
Height	: 181 cm

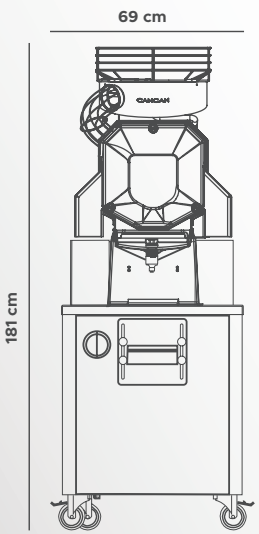

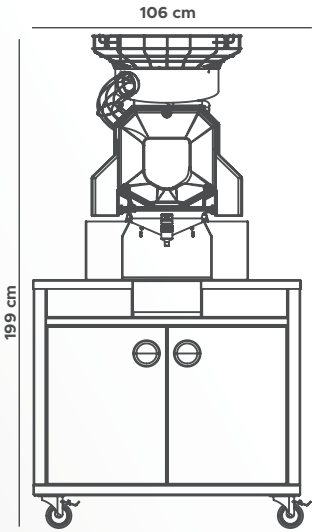

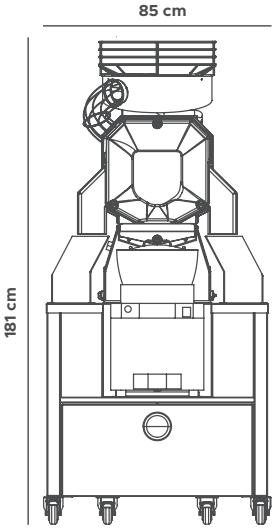

Technical Specifications	: 0205 - 1101
Orange Squeezing Capacity	: 38 Pcs/ min.
Orange Diameter	: Ø 6 - 8 cm
Orange Basket	: 15 kg
Motor	: 0,37 kw
Consumption	: 2,5 A
Power	: 220 - 230 V
Frequency	: 50 - 60 Hz
Weight	: 117 kg
Width	: 69 cm
Depth	: 70 cm
Height	: 181 cm

Technical Specifications	: 0205-1107
Orange Squeezing Capacity	: 38 Pcs/ min.
Orange Diameter	: Ø 6 - 8 cm
Orange Basket	: 28 kg
Motor	: 0,37 kw
Consumption	: 2,5 A
Power	: 220 - 230 V
Frequency	: 50 - 60 Hz
Weight	: 137 kg
Width	: 106 cm
Depth	: 94 cm
Height	: 199 cm

Technical Specifications	: 0208
Orange Squeezing Capacity	: 38 Pcs/ min.
Orange Diameter	: Ø 6 - 8 cm
Orange Basket	: 15 kg
Motor	: 0,37 kw
Consumption	: 2,5 A
Power	: 220 - 230 V
Frequency	: 50 - 60 Hz
Weight	: 149 kg
Width	: 85 cm
Depth	: 81 cm
Height	: 181 cm

AUTOMATIC POMEGRANATE JUICERS



0601 32 WITH GLASS AUTOMATIC POMEGRANATE JUICER

The Automatic Pomegranate Juicer with Glass is designed to squeeze pomegranete and grapefruits in places such as hotel, restaurant, school canteen, entertainment center and shopping malls.

This fully automatic machine; feeds, cuts and squeezes the pomegranates, removes the juice from the pulp and collects the juice. This product, capable of squeezing 32 pieces of pomegranates and grapefruits per minute, is fast and provides you clean and easy usage.



TECHNICAL SPECIFICATIONS

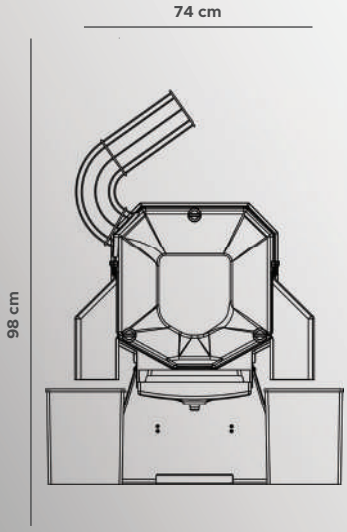

Technical Specifications	:	0601
Pomegranate Squeeze	:	32 Pcs/min.
Pomegranate Diameter	:	Ø 7 - 10 cm
Pomegranate Feeding Capacity	:	6-8 Pcs
Motor	:	0,55 kw
Consumption	:	2,5 A
Power	:	220 - 230 V
Frequency	:	50 - 60 Hz
Weight	:	68 kg
Width	:	74 cm
Depth	:	71 cm
Height	:	98 cm

CANCAN
• SINCE 1958 •

0602-1101 32 AUTOMATIC POMEGRANATE JUICER
WITH JUICE TANK & STAND



The Automatic Pomegranate Juicer with Tank is designed to squeeze pomegranate and grapefruits in places such as hotel, restaurant, school canteen, shopping centers and supermarkets.

The fully automatic machine has 5 liter capacity of juice and the mobile stand offers 70 kg capacity of fruits peels storage.

TECHNICAL SPECIFICATIONS

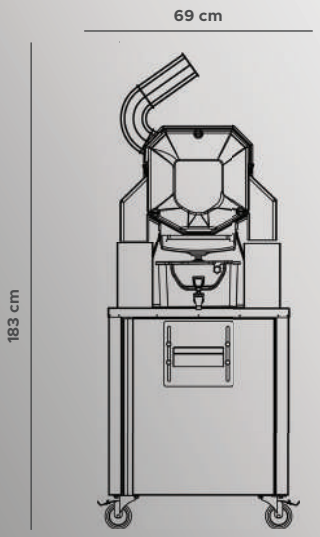

Technical Specifications	:	0602-1101
Pomegranate Squeeze	:	32 Pcs/min.
Pomegranate Diameter	:	Ø 7 - 10 cm
Pomegranate Feeding Capacity	:	6-8 Pcs
Motor	:	0,55 kw
Consumption	:	2,5 A
Power	:	220 - 230 V
Frequency	:	50 - 60 Hz
Weight	:	109 kg
Width	:	69 cm
Depth	:	71 cm
Height	:	183 cm

*** Mobile Stand is Optional.**

CANCAN
• SINCE 1958 •

0603 AUTOMATIC POMEGRANATE PRESS





Automatic Pomegranate Press is the smallest designed machine that can be used in places such as hotels, restaurants, commercial centers, entertainment and shopping centers, student dormitories, universities and fruit juice bars.

Its most important advantage is that it provides the opportunity to squeeze a wide variety of fruits with just a single machine. It enables the squeezing of fruits such as pomegranate, orange, grapefruit, lemon and tangerine very easily thanks to the hydraulic pressure system.

Thanks to the double filter system, it does not mix the fruit pulp into the fruit juice. It is very practical and easy to clean with its complete stainless body and stainless parts.

TECHNICAL SPECIFICATIONS

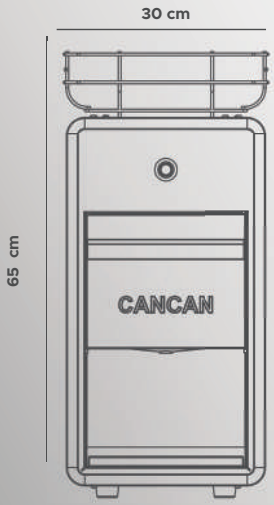

Technical Specifications	:	0603
Pressing Plate Size	:	13 x 24 cm
Cup Reservoir Height	:	17 cm
Fruit Squeezing Capacity	:	6 Pcs/ min
Fruit Diameter	:	Ø 13 cm
Fruit Reservoir	:	7 kg
Motor	:	0,55 kw
Consumption	:	3,4 A
Power	:	220 V
Frequency	:	50 - 60 Hz
Weight	:	50 kg
Width	:	30 cm
Depth	:	44 cm
Height	:	65 cm

CANCAN • SINCE 1958 •

PREPARATION EQUIPMENT

1301 VEGETABLE CUTTER



Designed for industrial kitchens in hotels, restaurants, and cafes, the vegetable cutter features a solid structure and sharp blades.

It ensures uniform cutting while preserving the freshness of fruits and vegetables, all without crushing them.

It enhances efficiency through its ergonomic design, delivering a smooth and effortless operation.

TECHNICAL SPECIFICATIONS

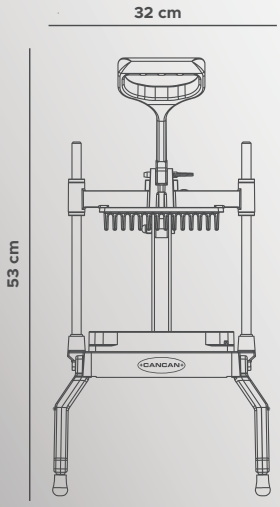

Blade Specifications

Product code :

1301-1	1301-2	1301-3
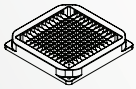	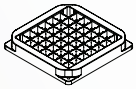	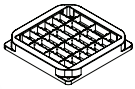
12,5 mm x 12,5 mm	25 mm x 25 mm	25 mm x 50 mm

Technical Specifications	: 1301
Weight	: 9,5 kg
Width	: 32 cm
Depth	: 43 cm
Height	: 53 cm
Maximum lettuce diameter	: 17 cm



CANCAN • SINCE 1958 •

1302 TOMATO SLICER

Made of first-class stainless steel material and reinforced with durable components, the tomato slicer is manufactured to withstand intensive use in industrial kitchens. With its serrated blades, the tomato slicer can easily cut through tough and unripe tomatoes, preserving their freshness and flavor.





TECHNICAL SPECIFICATIONS

Blade Specifications

Product code :

1302-1	1302-2	1302-3
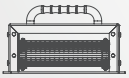	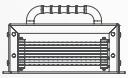	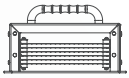
5 mm	7 mm	10 mm

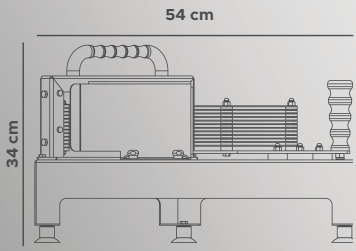

Technical Specifications	: 1302
Weight	: 10 kg
Width	: 22 cm
Depth	: 54 cm
Height	: 34 cm
Maximum Tomato diameter	: 9,5 cm



CANCAN • SINCE 1958 •

1306 CORING SPOON



The Coring Spoon, efficiently removes tomato stems in a single action, simplifying creative culinary tasks like tomato carving. This specialized tool facilitates quick and easy preparation of fresh tomatoes, making it a valuable addition to your kitchen utensils.

TECHNICAL SPECIFICATIONS



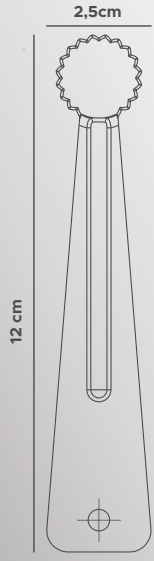

Technical Specifications	: 1306
Weight	: 10 gr
Width	: 2,5 cm
Depth	: 1,5 cm
Height	: 12 cm

1307 WALNUT OPENER

The Walnut Opener is designed to effortlessly crack the tough shells of walnuts. It serves as a practical and secure alternative to traditional methods, saving both time and energy while preserving the natural flavor of the walnuts when presented on the dish.



TECHNICAL SPECIFICATIONS

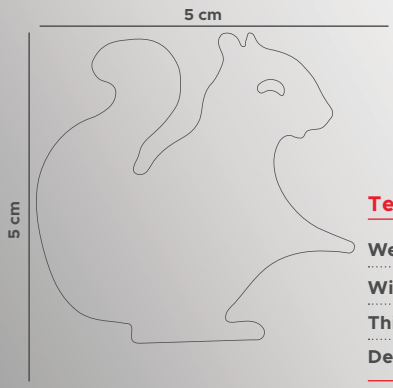

Technical Specifications	:	1307
Weight	:	10 gr
Width	:	5 cm
Thickness	:	0,1 cm
Depth	:	5 cm

1308 SMALL SIZE TOMATO SLICER

Small Size Tomato Slicer is used in industrial kitchens such as hotels, cafes and restaurants. Its sharp, serrated blades delicately slice tomatoes, preserving their taste without causing any breakage. Moreover, its ergonomic design allows for maximum efficiency in compact kitchen spaces.

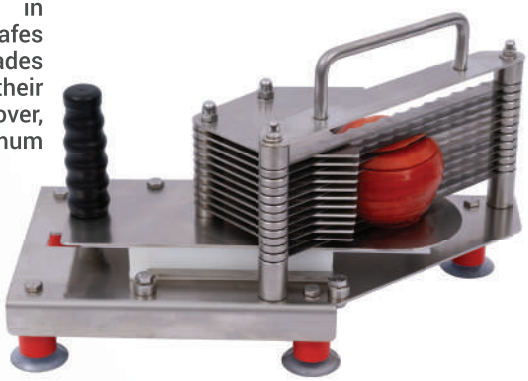



TECHNICAL SPECIFICATIONS

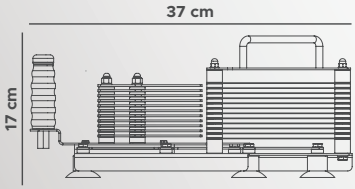

Blade Specifications

Product code:

1308-1	1308-2	1308-3
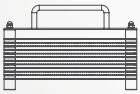	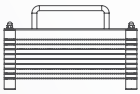	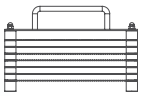
5 mm	7 mm	10 mm

Technical Specifications	: 1308
Weight	: 3,70 kg
Width	: 16 cm
Depth	: 37 cm
Height	: 17 cm
Maximum tomato diameter	: 9,5 cm



CANCAN • SINCE 1958 •

1313 CHEESE SLICER

The Cheese Slicer, suitable for industrial kitchens like those in hotels, restaurants, and cafes, facilitates effortless cutting of various cheese types and eggs, ensuring they remain intact. Its ergonomic design adds to its functionality, making it easy to use.



TECHNICAL SPECIFICATIONS

Blade Specifications

Product code:

1313-1	1313-2	1313-3
		
5 mm	7 mm	10 mm

Technical Specifications	: 1313
Weight	: 3,90 kg
Width	: 23 cm
Depth	: 40 cm
Height	: 11 cm
Table size	: 16,5 x 9,1 cm

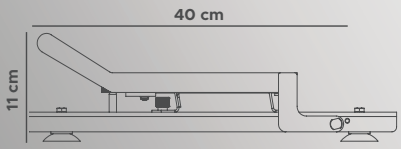



CANCAN
• SINCE 1958 •

1316 LEMON CUTTER

The Lemon Cutter, designed for quick and precise lemon slicing, is employed in various establishments such as hotels, restaurants, bars, and cafes. Its sharp blades enhance the visual appeal of lemon presentations.



TECHNICAL SPECIFICATIONS

Blade Specifications

Product code :

1316-1	1316-2	1316-3	1316-4	1316-5	1316-6
				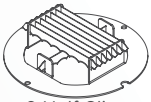	
4 Slices	6 Slices	8 Slices	12 Slices	6 Half Slices	12 Half Slices

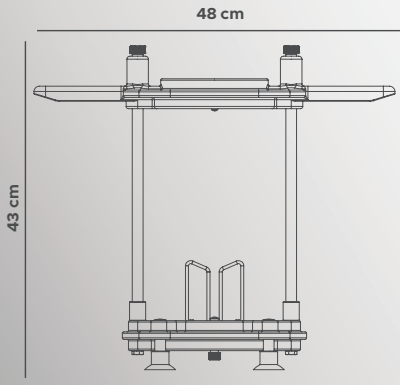

Technical Specifications	: 1316
Weight	: 3,4 kg
Width	: 48 cm
Depth	: 18 cm
Height	: 43 cm
Maximum lemon diameter	: 8 cm



CANCAN
• SINCE 1958 •

1319 ONION FLOWERING CUTTER

The precisely designed blades of the onion flower cutter allow the onion to open into a flower shape, increasing versatility and efficiency in the menu with different presentation types.

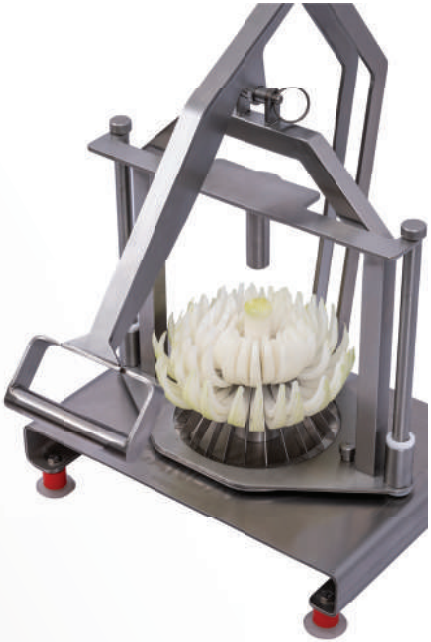

TECHNICAL SPECIFICATIONS

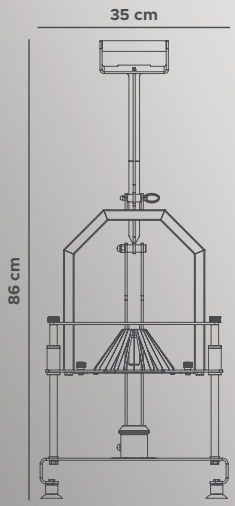

Blade Specifications

Product code :

1319



Technical Specifications	: 1319
Weight	: 9,5 kg
Width	: 35 cm
Depth	: 26 cm
Height	: 86 cm
Maximum onion diameter	: 10 cm

CANCAN • SINCE 1958 •

1320 MANDOLINE SLICER

The Mandoline Slicer, used in industrial kitchens, accurately slices fruits and vegetables into uniform sizes with its sharp serrated blades. It streamlines kitchen tasks by providing an adjustable slicing range, from 1.5 mm to 6.5 mm.



TECHNICAL SPECIFICATIONS

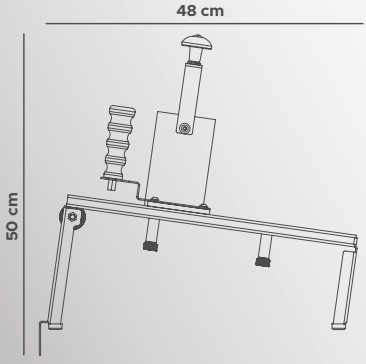

Blade Specifications

Product code : 1320

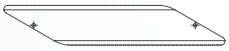

5 cm x 27,5 cm

Technical Specifications	: 1320
Weight	: 4 kg
Width	: 24,5 cm
Depth	: 48 cm
Height	: 50 cm
Maximum vegetable diameter	: 8 cm



1321 MANUAL POTATO CUTTER

In industrial kitchens, it finds frequent use for rapidly and consistently cutting potatoes. Different blade options ensures the creation of uniformly sized potato slices.



TECHNICAL SPECIFICATIONS

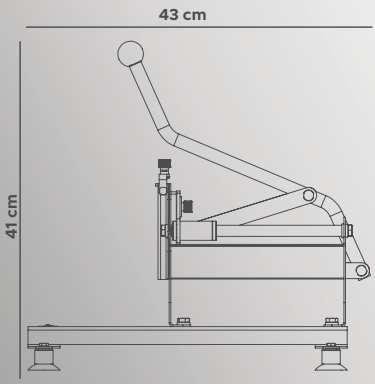

Blade Specifications

Product code :

1321-1	1321-2	1321-3
		
6 mm x 6 mm	10 mm x 10 mm	13 mm x 13 mm

Technical Specifications	: 1321
Weight	: 4,7 kg
Width	: 20 cm
Depth	: 43 cm
Height	: 41 cm
Maximum potato diameter	: 8 cm

CANCAN
• SINCE 1958 •

1323 VEGETABLE&FRUIT PEELER

The Peeling Machine, suitable for use in various settings including hotels, restaurants, cafes, and industrial kitchens, efficiently peels fruits and vegetables. This machine combines practicality and efficiency, accelerating and standardizing the peeling process.



TECHNICAL SPECIFICATIONS

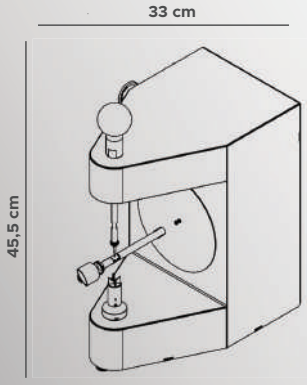

Technical Specifications	:	1323
Weight	:	11,3 kg
Width	:	24 cm
Depth	:	33 cm
Height	:	45,5 cm
Thinner Peels (Setting 1)	:	8 pcs/min
Thicker Peels (Setting 2)	:	4 pcs/min
Maximum fruit-vegetable diameter	:	11,5 cm
Watt Power	:	35 Watt
Amp	:	2,9 Aa
Voltage	:	220-250 VAC, 50-60 HZ
IP	:	IPx4



1324 MANUAL MELON CUTTING TOOL

Manual Melon Cutting Tool, suitable for use in industrial kitchens, effortlessly creates uniform slices with its exceptionally sharp blades.



TECHNICAL SPECIFICATIONS

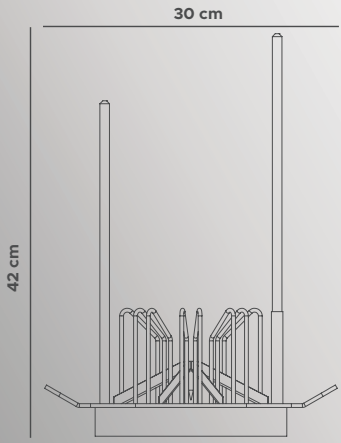

Blade Specifications

Product code:

1324-1	1324-2	1324-3
		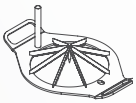
4 slices	6 slices	8 slices

Technical Specifications	: 1324
Weight	: 2,5 kg
Width	: 30 cm
Depth	: 20 cm
Height	: 42 cm
Maximum melon diameter	: 15 cm

CANCAN
• SINCE 1958 •

1332 MANUAL WATERMELON CUTTING TOOL

Manual Watermelon Cutting Tool, suitable for industrial kitchens, achieves uniform slices with its precision-engineered sharp blades.



TECHNICAL SPECIFICATIONS

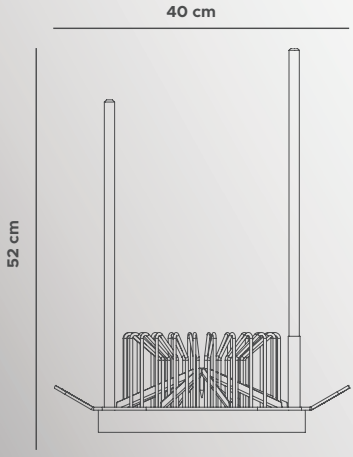

Blade Specifications

Product code :

1332-1



4 slices

1332-2



6 slices

1332-3

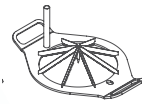

8 slices

Technical Specifications	: 1332
Weight	: 4,5 kg
Width	: 40 cm
Depth	: 23 cm
Height	: 52 cm
Maximum watermelon diameter	: 28 cm



CANCAN
• SINCE 1958 •

1327 MANUAL WATERMELON SLICER

Manual Watermelon Slicer makes slicing watermelons and melons easy.

This machine simplifies the cutting process, dividing the product into equal slices and enhancing its visual appeal for presentations.

It is commonly used in various settings such as markets, restaurants, cafes, hotels, and industrial kitchens.



TECHNICAL SPECIFICATIONS

Blade Specifications

Product code : 1327

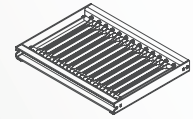

15 mm

Technical Specifications	: 1327
Weight	: 16,7 kg
Width	: 49 cm
Depth	: 50 cm
Height	: 17 cm
Maximum length of fruit	: 37,5 cmx7,5 cm

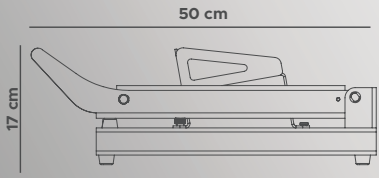



CANCAN
• SINCE 1958 •

1325 LEAF CUTTER

Leaf Cutter, used in industrial kitchens such as hotels, restaurants, fast food establishments, and catering services, has cutting thickness of 1.5mm.

The blade is constructed from stainless steel and complies with food safety standards.

By cutting fruits and vegetables into leaf shapes, it enhances the visual appeal and taste of food presentations.



TECHNICAL SPECIFICATIONS

Blade Specifications

Product code : 1325

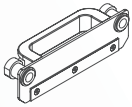

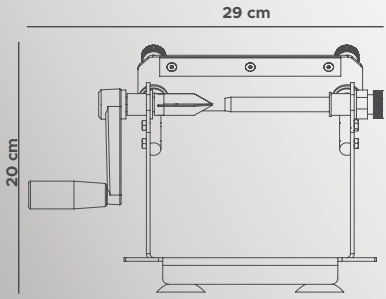

Technical Specifications	: 1325
Weight	: 2,3 kg
Width	: 29 cm
Depth	: 21 cm
Height	: 20 cm
Maximum cutting diameter	: 15 cm
Maximum cutting length	: 12 cm



CANCAN • SINCE 1958 •

1326 MANUAL PINEAPPLE SLICER

Used in supermarkets, hotels, restaurants, and grocery stores, a manual pineapple slicer helps to slice pineapples into equal pieces.

Thanks to its functional design and sharp blades, it quickly and effectively slices the fruit.



TECHNICAL SPECIFICATIONS

Blade Specifications

Product code : 1326

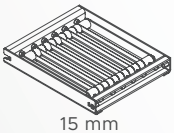

15 mm

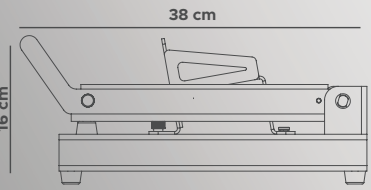

Technical Specifications	: 1326
Weight	: 8,4 kg
Width	: 27 cm
Depth	: 38 cm
Height	: 16 cm

CANCAN
• SINCE 1958 •

0801-1104 PINEAPPLE PEELER MACHINE WITH STAND



The Pineapple Peeler is designed to effortlessly remove the peel and core of the pineapple in a single motion, making it ideal for use in hotels, restaurants, shopping malls, and grocery stores.

The stainless stand that has two options, with and without shelves, is designed for storage of the pineapples.

TECHNICAL SPECIFICATIONS

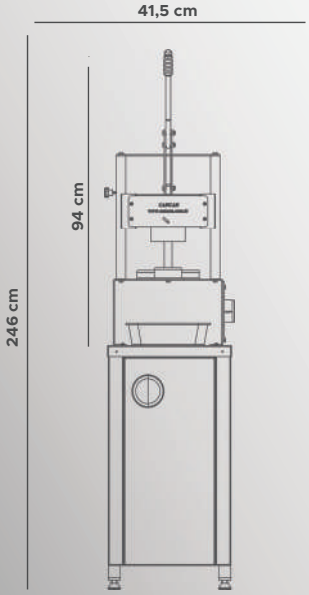

Blade Specifications

Product code :

0804	0805	0806	0807
74 mm	89 mm	95 mm	102 mm
Pieces per box			
10-12 pcs.	8-10 pcs.	6-8 pcs.	5-6 pcs.

Technical Specifications	: 0801-1104
Weight	: 31 kg
Width	: 41,5 cm
Depth	: 65 cm
Height	: 246 cm
Machine Weight	: 13 kg
Stand Weight	: 18 kg

Stand is Optional

CANCAN • SINCE 1958 •

0810 PINEAPPLE GUILLOTINE CUTTER

The Pineapple Guillotine Cutter is designed for precise corner cutting of pineapples, making it suitable for various settings such as supermarkets, hotels, restaurants, shopping malls, and greengrocers.

Its user-friendly design makes it particularly well-suited for use in industrial kitchens.



TECHNICAL SPECIFICATIONS

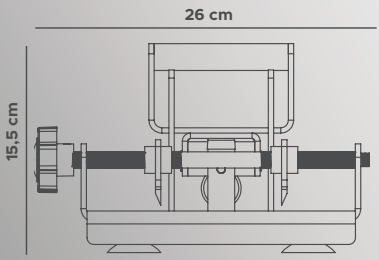

Technical Specifications	:	0810
Weight	:	5,8 kg
Width	:	26 cm
Depth	:	40 cm
Height	:	15,5 cm
Maximum pineapple diameter	:	150 mm
Cutting range	:	8-18 cm

CANCAN
• SINCE 1958 •

1423 PINEAPPLE TRIO

With a stand specifically designed for supermarkets and greengrocers, this product combines the Pineapple Guillotine, Pineapple Peeler, and Pineapple Slicer machines, offering a space-saving solution for storing pineapples on shelves.

Additionally, it provides added convenience during the cutting process with its waste container.



TECHNICAL SPECIFICATIONS

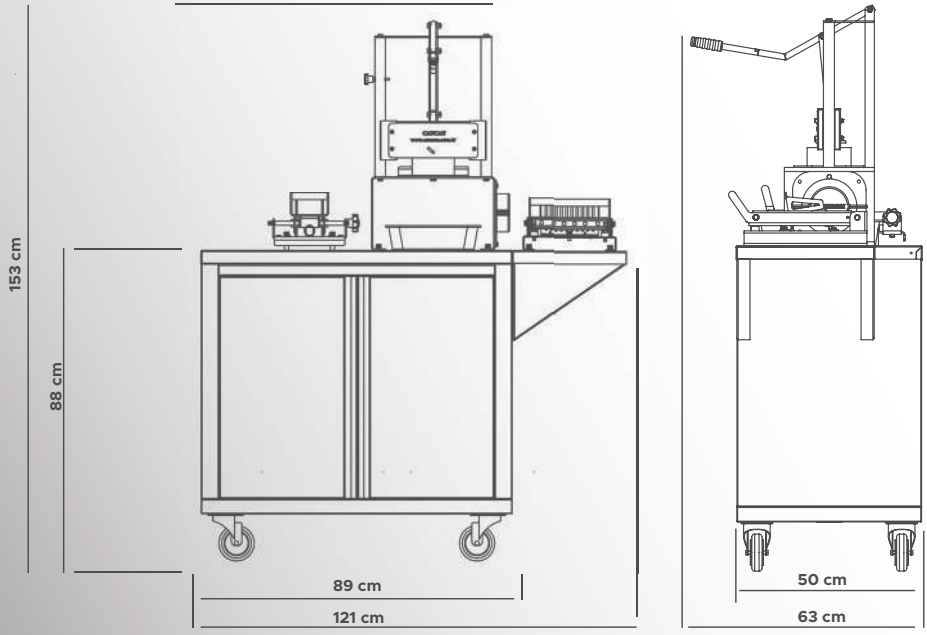

1315 FRUIT CUTTER



The Fruit Cutter provides time-saving practicality in the kitchen, swiftly and consistently slicing fruits into equal portions.

It has become an indispensable tool in both household and industrial kitchens, offering exceptional convenience.

TECHNICAL SPECIFICATIONS

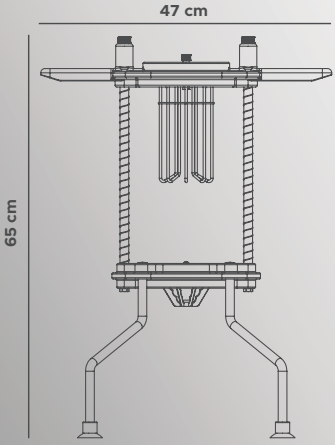

Blade Specifications

Product code :

1315 - 1	1315 - 2	1315 -3	1315 -4
			
4 Slices	6 Slices	8 Slices	12 Slices

1315 - 5 Core Remover Blade	1315 - 6 Core Remover Blade	1315 - 7 Core Remover Blade	1315 - 8 Core Remover Blade
			
4 Slices	6 Slices	8 Slices	12 Slices

Technical Specifications	: 1315
Weight	: 4,90 kg
Width	: 47 cm
Depth	: 35 cm
Height	: 65 cm



1318 Vertical Tomato Slicer



The Vertical Tomato Slicer, suitable for use in various settings such as hotels, restaurants, cafes, and industrial kitchens, offers time-saving practicality in the kitchen.

It simplifies the process of cutting products into fast, precise, and uniform slices.

TECHNICAL SPECIFICATIONS

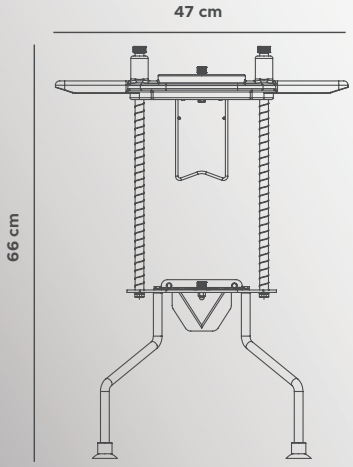

Blade Specifications

Product code :	1318-1	1318-2	1318-3
	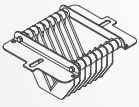	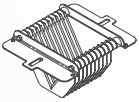	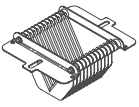
	10 mm	7 mm	5 mm

Technical Specifications	: 1318
Weight	: 5,45 kg
Width	: 47 cm
Depth	: 35 cm
Height	: 66 cm



CANCAN
• SINCE 1958 •

1317 COMBINE SLICER



The Combine Slicer, suitable for use in various settings such as hotels, restaurants, cafes, and industrial kitchens, simplifies the process of cutting vegetables and fruits into fast, precise, and uniform slices, thus saving time and enhancing kitchen practicality.

Widely employed in diverse areas, from restaurant kitchens to food service establishments, this versatile machine significantly boosts the efficiency of professional chefs.

TECHNICAL SPECIFICATIONS

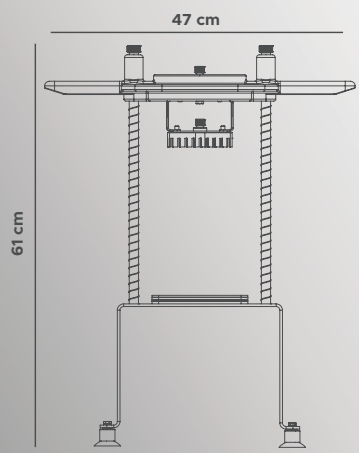

Blade Specifications

Product code :

1317 - 1	1317 - 2	1317 -3	1317 -4
4 Slices	6 Slices	8 Slices	12 Slices

1317 - 5 Core Remover Blade	1317 - 6 Core Remover Blade	1317 - 7 Core Remover Blade	1317 - 8 Core Remover Blade
4 Slices	6 Slices	8 Slices	12 Slices

1317 - 9	1317 - 10	1317 - 11	1317 - 13	1317 - 14
10 mm	7 mm	5 mm	10 mm	13 mm

Technical Specifications : 1317

Weight	: 7 kg
Width	: 47 cm
Depth	: 18 cm
Height	: 61 cm



1330 PIZZA SLICER

The Pizza Slicer ensures uniform-sized pizza slices and offers time-saving, hygienic slicing in restaurants and industrial kitchens.



TECHNICAL SPECIFICATIONS

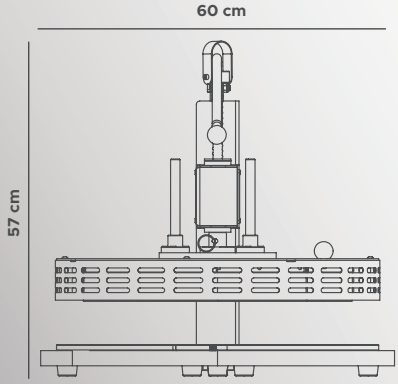

Blade Specifications

Product code : 1330

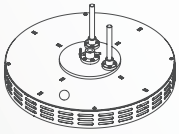

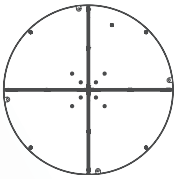

4-8 Slice

Technical Specifications	: 1330
Weight	: 39 kg
Width	: 60 cm
Depth	: 85 cm
Height	: 57 cm
Cuts pizza up to 55 cm diameter	

CANCAN
• SINCE 1958 •

1305 PNEUMATIC POTATO CUTTER

With the Pneumatic French potato cutter, potatoes are sliced quickly and precisely, enhancing efficiency through consistently perfect cuts with its sharp stainless steel blades.



TECHNICAL SPECIFICATIONS

Blade Specifications

Product code :	1305-1	1305-2	1305-3
		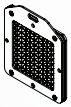	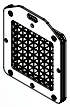
	6 mm	10 mm	13 mm

Technical Specifications : 1305

Weight	: 19,2 kg
Width	: 26 cm
Depth	: 69 cm
Height	: 27 cm
Maximum potato diameter	: 8 cm
Maximum power	: 100 kg cutting force
Working pressure	: 6-8 bar

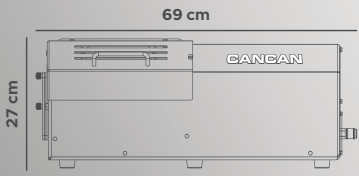



CANCAN
• SINCE 1958 •

1309 PNEUMATIC MELON CUTTER

The Pneumatic Melon Cutter performs precise and easy slicing.

By utilizing air pressure, it effortlessly slices melons of various sizes, ensuring smooth and consistent slices.



TECHNICAL SPECIFICATIONS

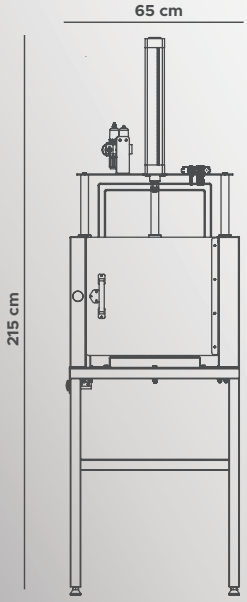

Blade Specifications

Product code : 1309

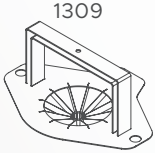

12 slices

Technical Specifications	: 1309
Weight	: 70 kg
Width	: 65 cm
Depth	: 54 cm
Height	: 215 cm

CANCAN • SINCE 1958 •

1310 PNEUMATIC WATERMELON CUTTER

The Pneumatic Watermelon Cutter performs precise and easy slicing, using air pressure to effortlessly slice watermelons with varying blade sizes, ensuring smooth slices.



TECHNICAL SPECIFICATIONS

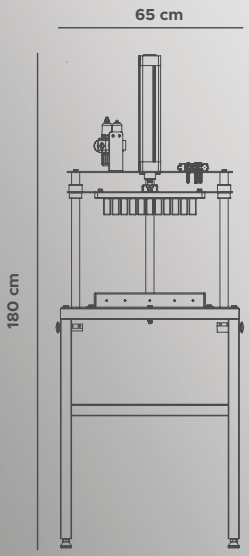

Blade Specifications

Product code :

1310-1 Circular

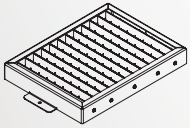

30 mm

1310-2 Cube

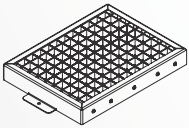

30 mmx30 mm

Technical Specifications	: 1310
Weight	: 60 kg
Width	: 65 cm
Depth	: 54 cm
Height	: 180 cm

0809 PNEUMATIC PINEAPPLE PEELER MACHINE (WITH STAND)



The Pneumatic Pineapple Peeler combines an air-powered system to simplify the labor-intensive and time-consuming pineapple peeling process.

This innovative solution offers fast and consistent peeling performance, resulting in significant time and labor cost savings.

TECHNICAL SPECIFICATIONS

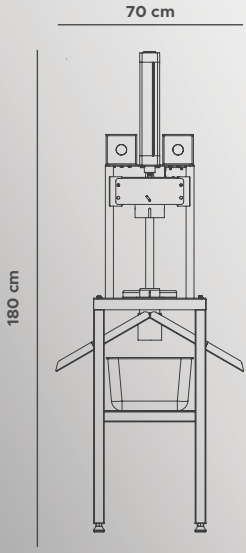

Blade Specifications

Product code :

0809 8 Slices	0809 2 Slices	0809 Peeling
		

Technical Specifications	: 0809
Width	: 70 cm
Depth	: 42 cm
Height	: 180 cm

CANCAN
• SINCE 1958 •

1701 BREAD OILER TOOL

Hotels, restaurants, cafes, and industrial kitchens, among others, can derive great benefits from the bread oiler tool, which enhances the flavor of bread.

This versatile tool can be used with a wide range of products, from butter to olive oil and spicy sauces, offering precise control over the application of oil and sauce.





TECHNICAL SPECIFICATIONS

Perforated Drum Features

Product code 1701

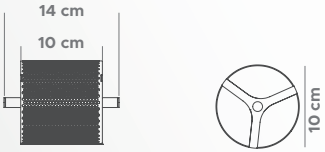

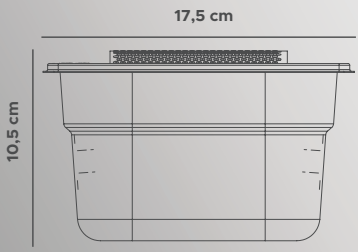

Technical Specifications	: 1701
Weight	: 0,55 kg
Width	: 17,5 cm
Depth	: 16 cm
Height	: 10,5 cm



CANCAN • SINCE 1958 •

ELECTRICAL & MANUAL CAN OPENERS

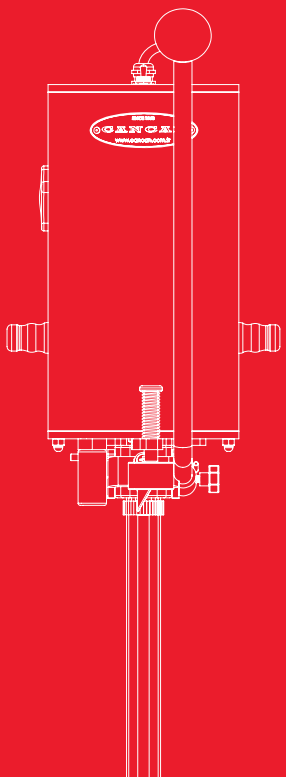

0702 PROFESSIONAL TYPE ELECTRICAL CAN OPENER CIRCLE CUT

CIRCLE

The all stainless steel Professional Type Electric Can Opener is designed to open tin cans such as cheese, olive, paint cans etc. in industrial kitchens without the need of extra power in a short time and in a quickly way with the help of the rotating helical gear that prevents gliding and slipping and the special design cutting blade.

Professional type electric can opener prevents possible workplace accidents.



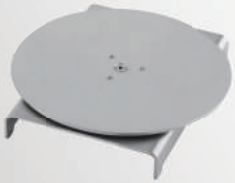

TECHNICAL SPECIFICATIONS

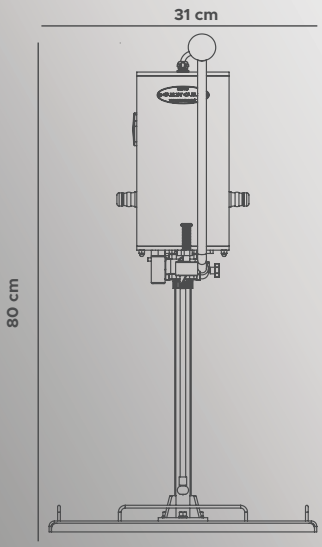

Technical Specifications	:	0702
Cutting Type	:	Circle
Can Opening Capacity	:	3 - 8 Pcs/min.
Can Sizes	:	6 cm - 35 cm Height Invertal Circle
Motor	:	0,18 kw
Power	:	220 - 230 V
Frequency	:	50 - 60 Hz
Weight	:	30 kg
Width	:	49 cm
Depth	:	31 cm
Height	:	80 cm

CANCAN
• SINCE 1958 •

0703 PROFESSIONAL TYPE ELECTRICAL CAN OPENER CIRCLE-SQUARE CUT

SQUARE & CIRCLE

The all stainless steel Professional Type Electric Can Opener is designed to open tin cans such as cheese, olive, paint cans etc. in industrial kitchens without the need of extra power in a short time and in a quickly way with the help of the rotating helical gear that prevents gliding and slipping and the special design cutting blade.

Professional type electric can opener prevents possible workplace accidents.





TECHNICAL SPECIFICATIONS

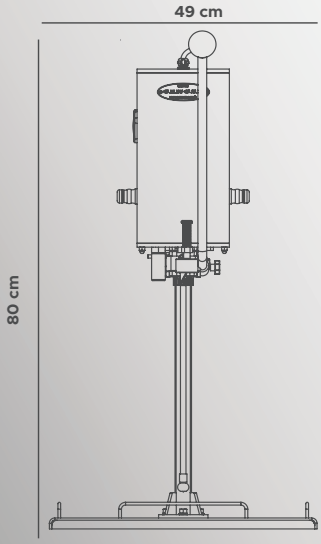

Technical Specifications	:	0703
Cutting Type	:	Circle- Square
Can Opening Capacity	:	3 - 8 Pcs/min.
Can Sizes	:	6 cm - 35 cm Height Invertal Circle 13 cm - 35 cm Height Invertal Square
Motor	:	0,18 kw
Power	:	220 - 230 V
Frequency	:	50 - 60 Hz
Weight	:	36 kg
Width	:	49 cm
Depth	:	59 cm
Height	:	80 cm

CANCAN
• SINCE 1958 •

0302 PROFESSIONAL TYPE MANUAL CAN OPENERS

The Manual Can Openers are providing big convenience to the users by opening either small or big cans in a safe and hygienic way in the professional catering sector and places such as industrial kitchens, hospitals, nursing homes and school canteens.



TECHNICAL SPECIFICATIONS

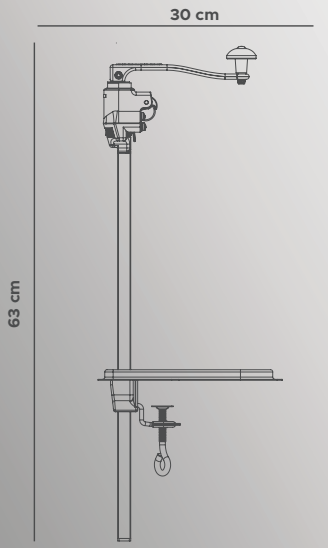

Technical Specifications	:	0302
Daily Capacity	:	40 - 65 cans
Weight	:	2 kg
Profile Height	:	63 cm
Can Sizes	:	Maximum 55cm

0303 DIAMOND TYPE MANUAL CAN OPENERS

The Manual Can Openers are providing big convenience to the users by opening either small or big cans in a safe and hygienic way in the professional catering sector and places such as industrial kitchens, hospitals, nursing homes and school canteens.



TECHNICAL SPECIFICATIONS

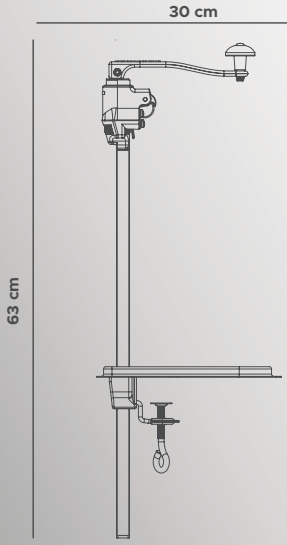

Technical Specifications	:	0303
Daily Capacity	:	65 - 100 cans
Weight	:	3 kg
Profile Height	:	63 cm
Can Sizes	:	Maximum 55cm

WASHING EQUIPMENT



0501 MT01 SINK MOUNTED PRE-RINSE FAUCET

2014 - 06257

Sink Mounted Pre-rinse Faucets are used in industrial kitchens, industrial dishwashing machines, vegetable and fruit washing units in the pre-washing stage.



TECHNICAL SPECIFICATIONS

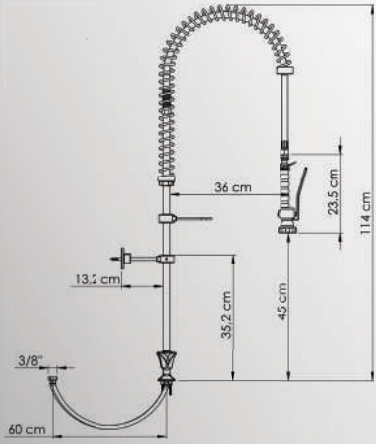

Technical Specifications	: 0501
Weight	: 4,4 kg
Width	: 15 cm
Depth	: 44 cm
Height	: 114 cm

0502 MT02 SINK MOUNTED PRE-RINSE FAUCET WITH INTERMEDIATE TAP

Sink Mounted Pre-rinse Faucets are used in industrial kitchens, industrial dishwashing machines, vegetable and fruit washing units in the pre-washing stage.



TECHNICAL SPECIFICATIONS

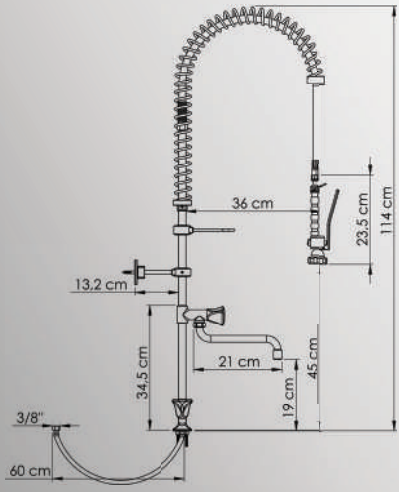

Technical Specifications	: 0502
Weight	: 4,8 kg
Width	: 15 cm
Depth	: 44 cm
Height	: 114 cm

0503 MT03 WALL MOUNTED PRE-RINSE FAUCET

2014 - 06257

Wall Mounted Pre-rinse Faucets are used in industrial kitchens, industrial dishwashing machines, vegetable and fruit washing units in the pre-washing stage.



TECHNICAL SPECIFICATIONS

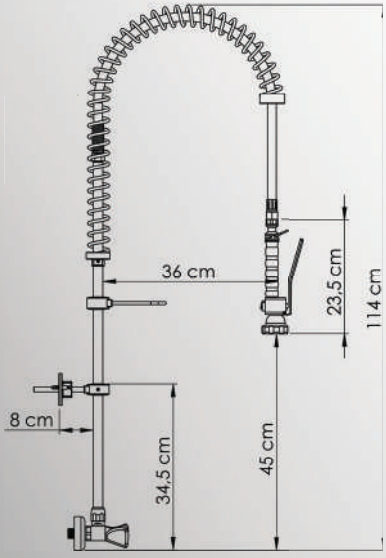

Technical Specifications	: 0503
Weight	: 4,2 kg
Width	: 15 cm
Depth	: 44 cm
Height	: 114 cm

0504 MT04 WALL MOUNTED PRE-RINSE FAUCET WITH INTERMEDIATE TAP

Wall Mounted Pre-rinse Faucets are used in industrial kitchens, industrial dishwashing machines, vegetable and fruit washing units in the pre-washing stage.



TECHNICAL SPECIFICATIONS

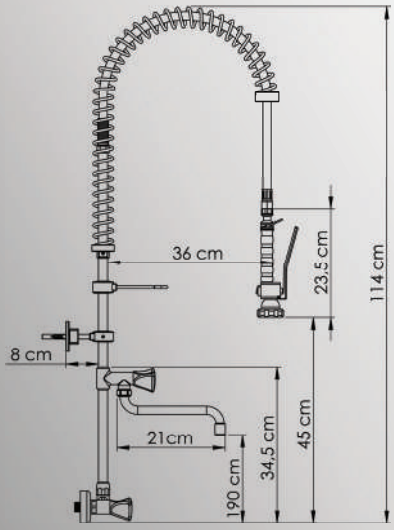

Technical Specifications	:	0504
Weight	:	4,9 kg
Width	:	15 cm
Depth	:	44 cm
Height	:	114 cm

0505 MT05 MINI SIZE SINK MOUNTED PRE-RINSE FAUCET

2014 - 06257

Mini Size Pre-rinse Faucets are used in industrial kitchens, industrial dishwashing machines, vegetable and fruit washing units in the pre-washing stage.



TECHNICAL SPECIFICATIONS

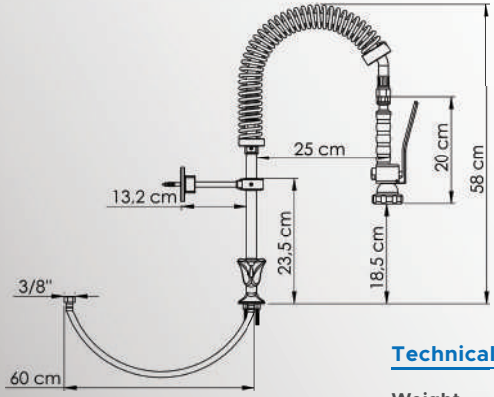

Technical Specifications	: 0505
Weight	: 3,2 kg
Width	: 15 cm
Depth	: 44 cm
Height	: 58 cm

0506 MT06 MINI SIZE SINK MOUNTED PRE-RINSE FAUCET WITH INTERMEDIATE TAP



Mini Size Pre-rinse Faucets are used in industrial kitchens, industrial dishwashing machines, vegetable and fruit washing units in the pre-washing stage.

TECHNICAL SPECIFICATIONS

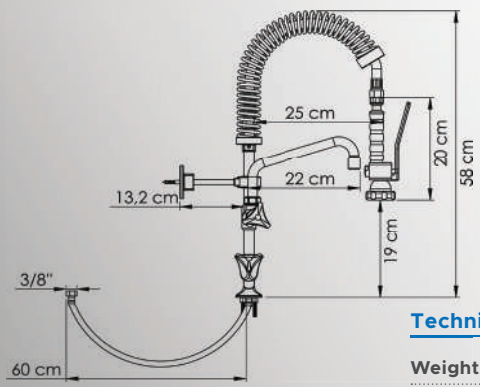

Technical Specifications	:	0506
Weight	:	3,8 kg
Width	:	15 cm
Depth	:	44 cm
Height	:	58 cm

DELUXE SERIES

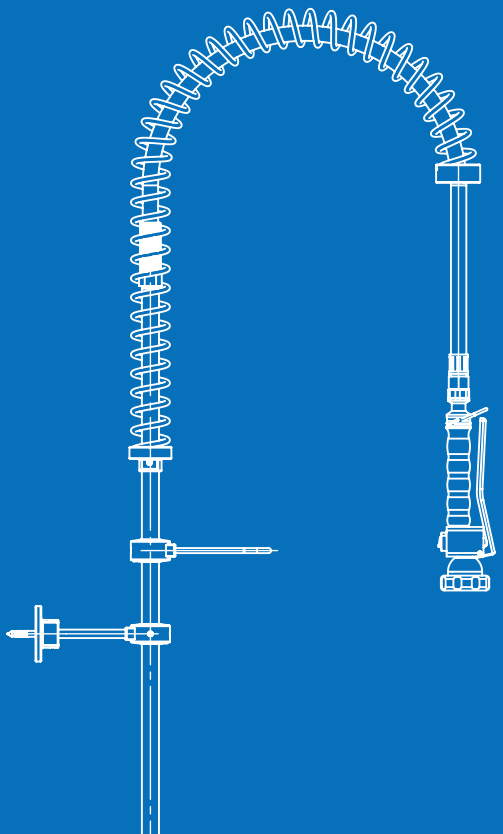

0507 MT01 DELUXE SINK MOUNTED PRE-RINSE FAUCET

Sink Mounted Pre-rinse Faucets are used in industrial kitchens, industrial dishwashing machines, vegetable and fruit washing units in the pre-washing stage.



TECHNICAL SPECIFICATIONS

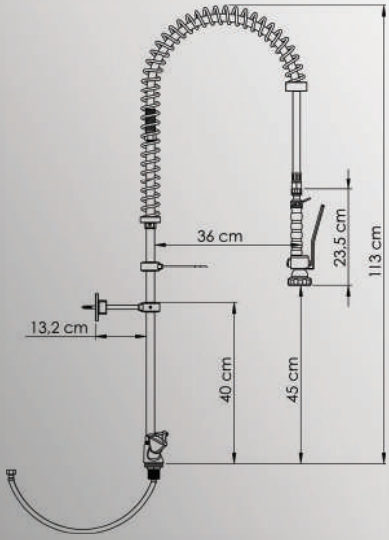

Technical Specifications	: 0507
Weight	: 4,7 kg
Width	: 16 cm
Depth	: 54 cm
Height	: 113 cm

0508 MT02 DELUXE SINK MOUNTED PRE-RINSE FAUCET WITH INTERMEDIATE TAP

Sink Mounted Pre-rinse Faucets are used in industrial kitchens, industrial dishwashing machines, vegetable and fruit washing units in the pre-washing stage.

Wall Mounted Pre-rinse Faucets are used in industrial dishwashing machines, vegetable and fruit washing units in the pre-washing stage.



TECHNICAL SPECIFICATIONS

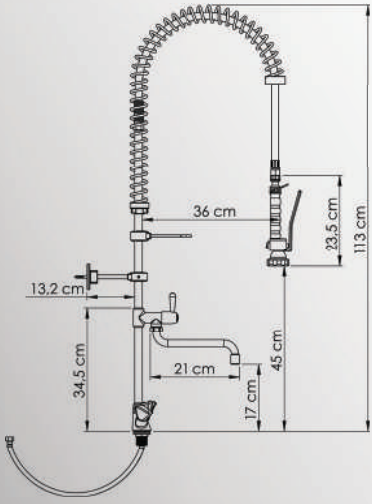

Technical Specifications	: 0508
Weight	: 5,4 kg
Width	: 16 cm
Depth	: 54 cm
Height	: 113 cm

0512 MT03 DELUXE WALL MOUNTED PRE-RINSE FAUCET

Wall Mounted Pre-rinse Faucets are used in industrial dishwashing machines, vegetable and fruit washing units in the pre-washing stage.



TECHNICAL SPECIFICATIONS

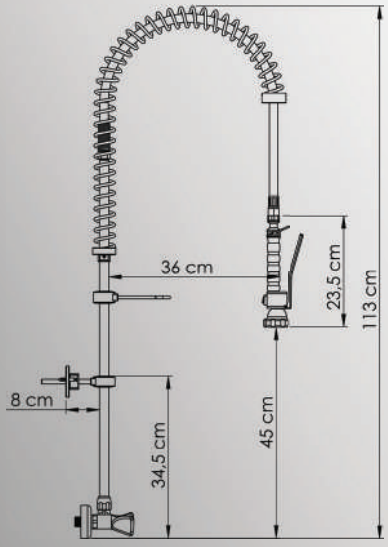

Technical Specifications	:	0512
Weight	:	4 kg
Width	:	22 cm
Depth	:	45 cm
Height	:	113 cm

0513 MT04 DELUXE WALL MOUNTED PRE-RINSE FAUCET WITH INTERMEDIATE TAP

Mini Size Pre-rinse Faucets are used in industrial kitchens, industrial dishwashing machines, vegetable and fruit washing units in the pre-washing stage.



TECHNICAL SPECIFICATIONS

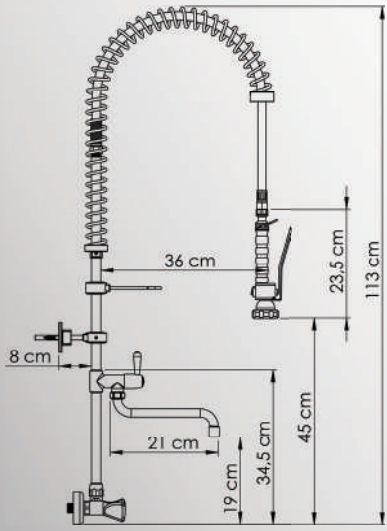

Technical Specifications	:	0513
Weight	:	5 kg
Width	:	22 cm
Depth	:	45 cm
Height	:	113 cm

0509 MT05 DELUXE MINI SIZE SINK MOUNTED PRE-RINSE FAUCET

Mini Size Pre-rinse Faucets are used in industrial kitchens, industrial dishwashing machines, vegetable and fruit washing units in the pre-washing stage.



TECHNICAL SPECIFICATIONS

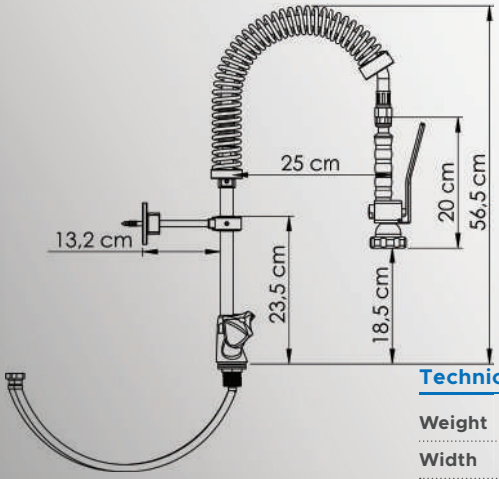

Technical Specifications	: 0509
Weight	: 3,5 kg
Width	: 16 cm
Depth	: 45 cm
Height	: 56,5 cm

0510 MT06 DELUXE MINI SIZE SINK MOUNTED PRE-RINSE FAUCET WITH INTERMEDIATE TAP

Mini Size Pre-rinse Faucets are used in industrial kitchens, industrial dishwashing machines, vegetable and fruit washing units in the pre-washing stage.



TECHNICAL SPECIFICATIONS

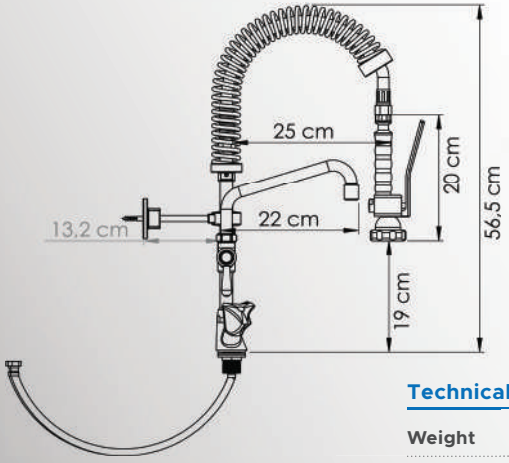

Technical Specifications	: 0510
Weight	: 4,2 kg
Width	: 16 cm
Depth	: 45 cm
Height	: 56,5 cm

SINK MOUNT
POT FILLER

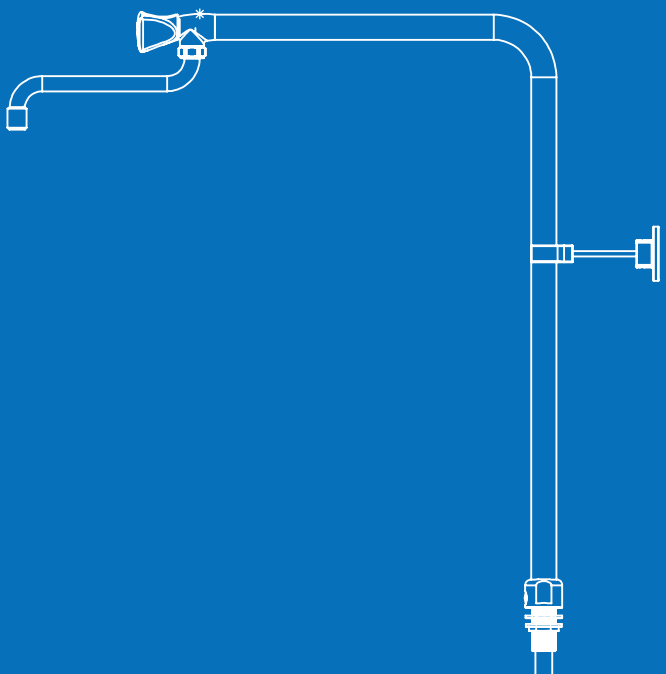

0511 SINK MOUNT POT FILLER

It is designed to fill water into boilers and pots in industrial kitchens.



TECHNICAL SPECIFICATIONS

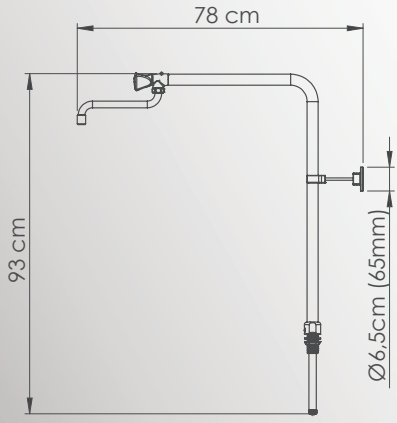

Technical Specifications	:	0511
Weight	:	2,8 kg
Width	:	78 cm
Depth	:	6,5 cm
Height	:	93 cm

RETRACTABLE MODELS

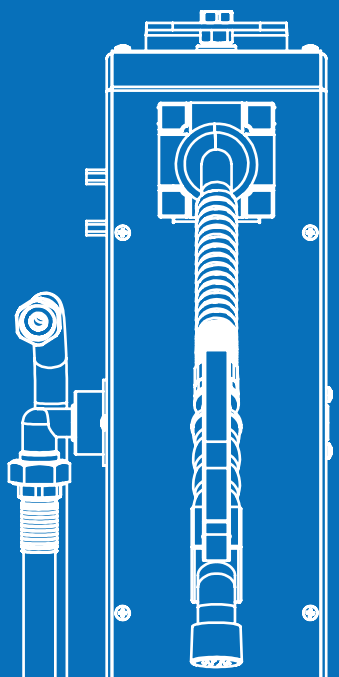

0905 RETRACTABLE PRE-RINSE FAUCET WITH REEL HOSE (2 MT)

Retractable Pre-rinse Faucets with reel hoses are used in industrial kitchens, food preparation and mass food production facilities, industrial dishwashing machines, vegetable and fruit washing units.



TECHNICAL SPECIFICATIONS

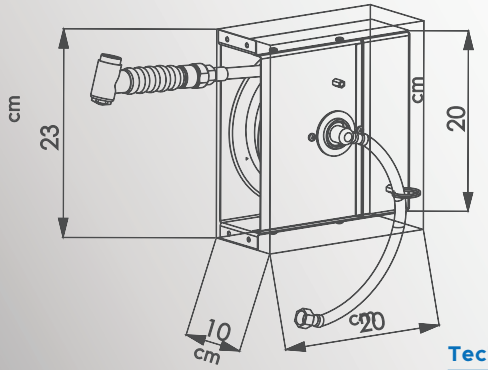

Technical Specifications	: 0905
Weight	: 3 kg
Width	: 10 cm
Depth	: 20 cm
Height	: 23 cm

0901 RETRACTABLE PRE-RINSE FAUCET WITH REEL HOSE (6 MT)

Retractable Pre-rinse Faucets with reel hoses are used in industrial kitchens, food preparation and mass food production facilities, industrial dishwashing machines, vegetable and fruit washing units, at the pre-washing stage in a minimum 38 square meters area with 2 collectable hose.



TECHNICAL SPECIFICATIONS

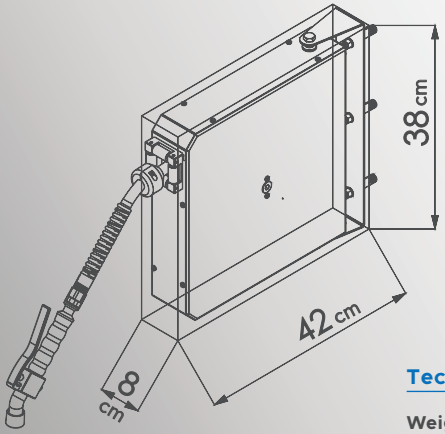

Technical Specifications	:	0901
Weight	:	10 kg
Width	:	8 cm
Depth	:	42 cm
Height	:	38 cm

0902 RETRACTABLE PRE-RINSE FAUCET WITH REEL HOSE (10 MT)

Retractable Pre-rinse Faucets with reel hoses are used in industrial kitchens, food preparation and mass food production facilities, industrial dishwashing machines, vegetable and fruit washing units, at the pre-washing stage in a minimum 63 square meters area with 2 collectable hose.



TECHNICAL SPECIFICATIONS

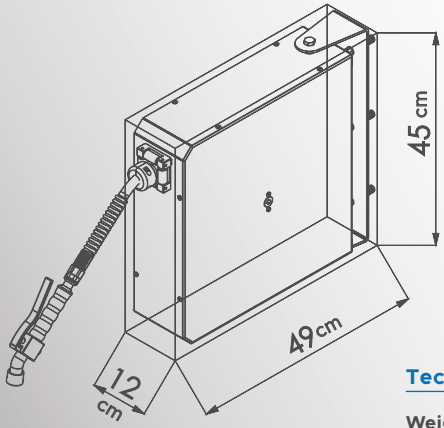

Technical Specifications	: 0902
Weight	: 15,6 kg
Width	: 12 cm
Depth	: 49 cm
Height	: 45 cm

0903 RETRACTABLE PRE-RINSE FAUCET WITH REEL HOSE (12 MT)

Retractable Pre-rinse Faucets with reel hoses are used in industrial kitchens, food preparation and mass food production facilities, industrial dishwashing machines, vegetable and fruit washing units, at the pre-washing stage in a minimum 75 square meters area with 2 collectable hose.



TECHNICAL SPECIFICATIONS

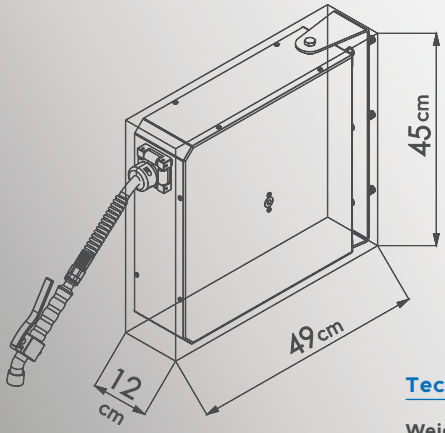

Technical Specifications	: 0903
Weight	: 16 kg
Width	: 12 cm
Depth	: 49 cm
Height	: 45 cm

0904 RETRACTABLE PRE-RINSE FAUCET WITH REEL HOSE (15 MT)

Retractable Pre-rinse Faucets with reel hoses are used in industrial kitchens, food preparation and mass food production facilities, industrial dishwashing machines, vegetable and fruit washing units, at the pre-washing stage in a minimum 100 square meters area with 2 collectable hose.



TECHNICAL SPECIFICATIONS

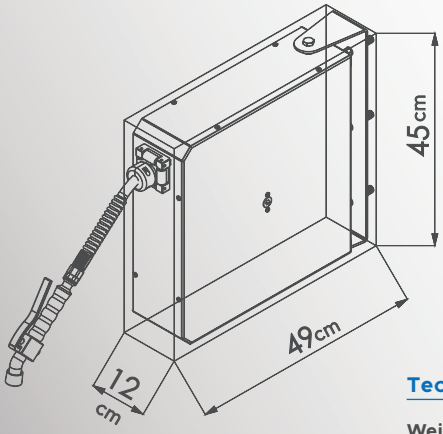

Technical Specifications	:	0904
Weight	:	16,5 kg
Width	:	12 cm
Depth	:	49 cm
Height	:	45 cm

INDUSTRIAL TYPE POT WASHING MACHINE

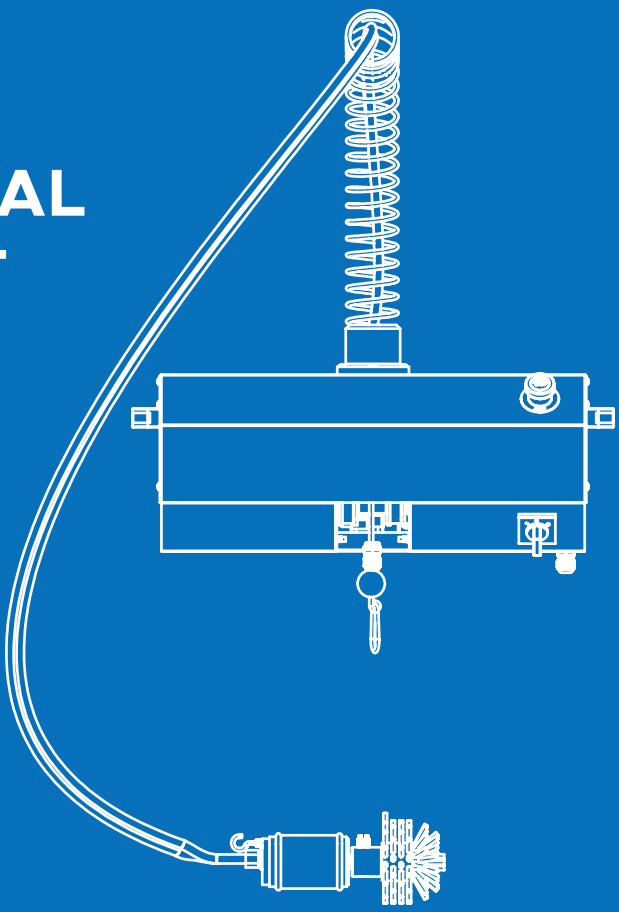

1001 INDUSTRIAL TYPE POT WASHING MACHINE

The Industrial Type Pot Washing Machine is designed to efficiently clean dirt and oils from pots and pans in industrial kitchens using a rotating or polishing brush, without requiring much power.

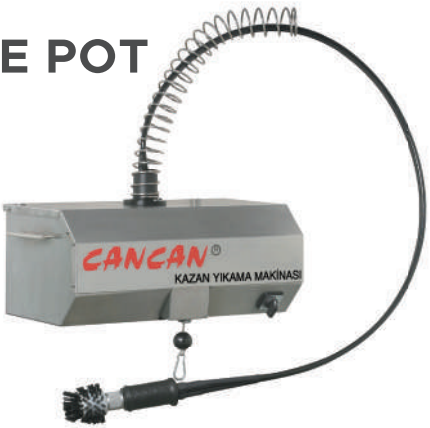

1001 Wall Mount Industrial Type Pot Washing Machine



1001-1105 Industrial Type Pot Washing Machine Trolley
*Trolley is optional

TECHNICAL SPECIFICATIONS

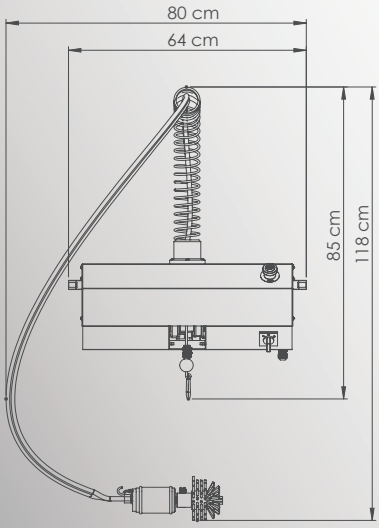

Technical Specifications	: 1001
Machine and Trolley Weight	: 27 kg
Trolley Weight	: 11 kg
Width	: 80 cm
Depth	: 38 cm
Height	: 118 cm
Engine	: 0.37 kw
Voltage	: 220-230 V
Phase	: 1
Hz	: 50
Ampere	: 1.5
Hydraulic Motor Speed	: 360 rpm
Hydraulic Motor Pressure	: 40 bar
Tank	: 3L

Not/Note:

Not/Note:

CANCAN®
• SINCE 1958 •

TURKEY CENTER FACTORY

CANCAN MEYVE PRESLERİ SAN. VE. TİC. LTD. ŞTİ.
Modern San. Sit. Yeşiltepe Mah. No: 15/1
Adapazarı / SAKARYA / TURKEY
T: +90 (264) 291 49 44
F: +90 (264) 291 49 45

RUSSIA CONTACT

Phone : +7 916 861 10 97
E-Mail : dymtro@cancan.com.tr

EUROPE CONTACT

Phone : +32 488 77 35 69
E-Mail : info@cancanhoreca.com

BELARUS CONTACT

Phone : +375 29 533 83 99
E-Mail : natalia@cancan.com.tr

USA OFFICE

CANCAN INDUSTRIAL KITCHEN EQUIPMENTS INC
Turkish Trade Center Chicago 2800-2900
Lively Blvd. Elk Grove IL60007 USA

T: +1 847 756 72 68
F: +1 847 430 48 03

www.cancan.com.tr

cancanmakine

@CancanTurkey

@CancanTurkey

cancanmeyvepresleri