Apach
Cook line

Catalogo parti di ricambio valido
dalla matricola 0000001 (31.10.2006) ad oggi (28.02.2023)

Catalogue pieces detachees
valable à partir du numero de Série n. 0000001 (31.10.2006) jusqu'à aujourd'hui (28.02.2023)

Ersatzteilkatalog
gültig ab Serien-Nr. 0000001 (31.10.2006) bis heute (28.02.2023)

Spare parts catalogue
valid from serial no. 0000001 (31.10.2006) up today (28.02.2023)

Catálogo de peças de reposição
válido do número de série 0000001 (31.10.2006) até hoje (28.02.2023)

Le informazioni sono considerate non vincolanti. Le immagini rappresentate sono puramente indicative. Il produttore si riserva il diritto di apportare modifiche in qualsiasi momento senza preavviso.

Les informations données ne sont pas contraignantes. Les images montrées sont à titre indicatif. Le producteur se réserve le droit d'apporter des modifications sans préavis.
Die im vorliegenden Dokument aufgeführten Informationen und Bilder sind unverbindlich. Der Hersteller behält sich das Recht vor, jederzeit ohne vorherige Ankündigung Änderungen vorzunehmen
Info and drawing could be slightly different from reality and they cannot be considered as compelling. Manufacturer can modify info anytime without forewarning.
As Informações e desenhoS podem estar um pouco diferente da realidade e são puramente indicativas. O fabricante pode modificar estas informações a qualquer momento sem aviso prévio.

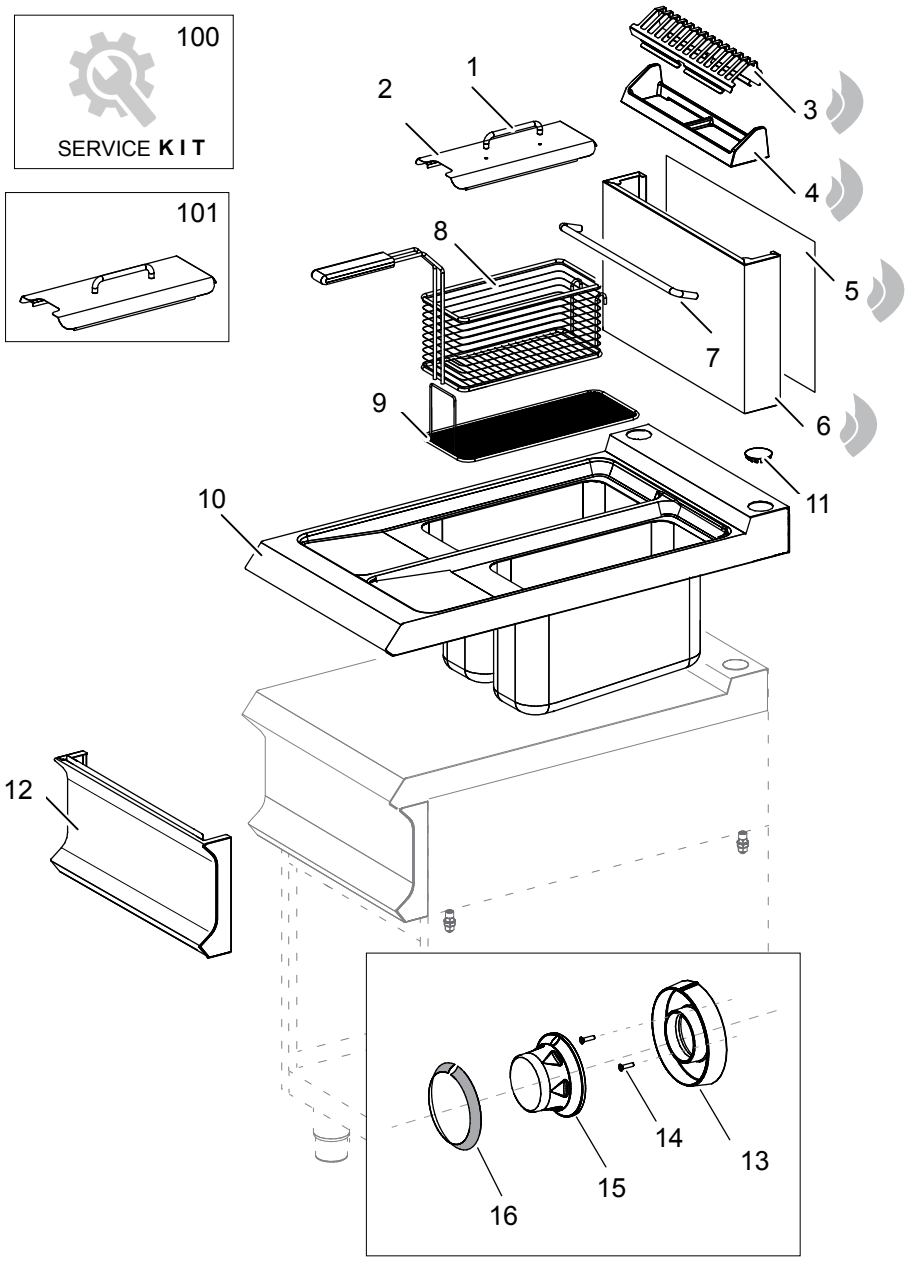
100
SERVICE KIT
101
1
2
3
4
5
6
7
8
9
10
11
12
13
14
15
16

Nr.	Code	Title	Recommended
1.	RTBF800020	*HANDLE CROMATO*	
2.	201395	*TANK LID*	
3.	202046	*CHIMNEY GRILL*	
5.	200106	*BACK WALL CHIMNEY*	
6.	200107	*FRONT WALL CHIMNEY*	
7.	182906	*PLATE*	
8.	A770000140	*BASKET FOR FRYER*	
9.	RTCU700449	*BASKET SUPPORT GRID*	
10.	202133	*ARBEITSPLATTE + WANNE*	
12.	202359	*CONTROL PANEL*	
101.	RIC0005023	*KIT COVER*	

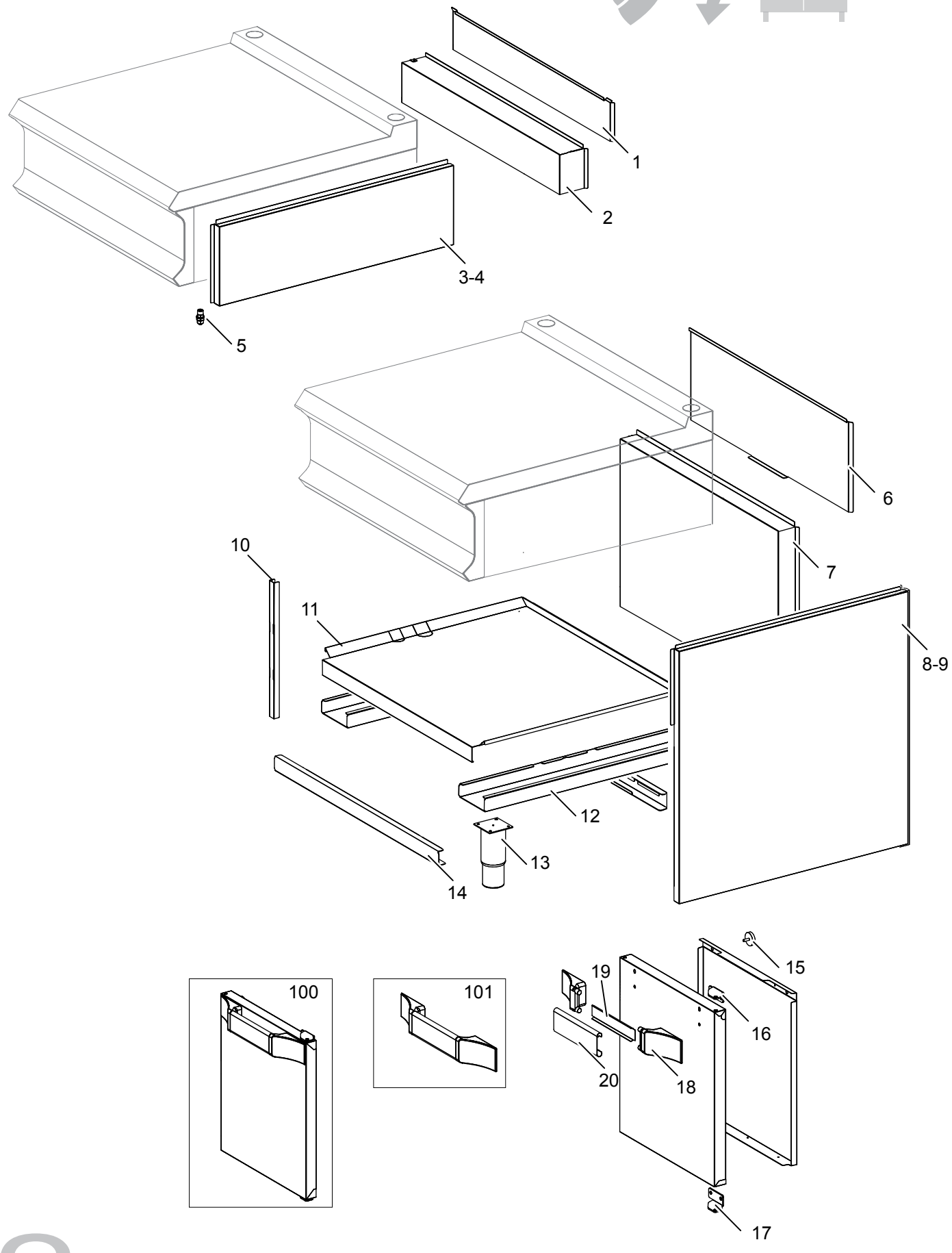
1
2
3-4
5
6
7
8-9
10
11
12
13
14
15
16
17
18
19
20
100
101

Nr.	Code	Title	Recommended
7.	201329	*SINGLE REAR*	
8.	200031	*LATERAL SIDE RIGHT*	
9.	200032	*LATERAL SIDE LEFT*	
11.	200678	*LOWER FLOOR*	
12.	200030	*CROSS FEET*	
13.	RTCU700277	*FOOT*	
14.	200029	*FRONT / REAR CROSS MEMBER*	
15.	181529	*DOOR MAGNET*	
16.	200064	*RIGHT HINGE*	
17.	200065	*LEFT HINGE*	
18.	201706	*HANDLE TERMINAL*	
20.	201926	*HANDLE*	
100.	RIC0005129	*CABINET DOOR COMPLETE*	
101.	RIC0005130	*HANDLE CUPBOARD*	

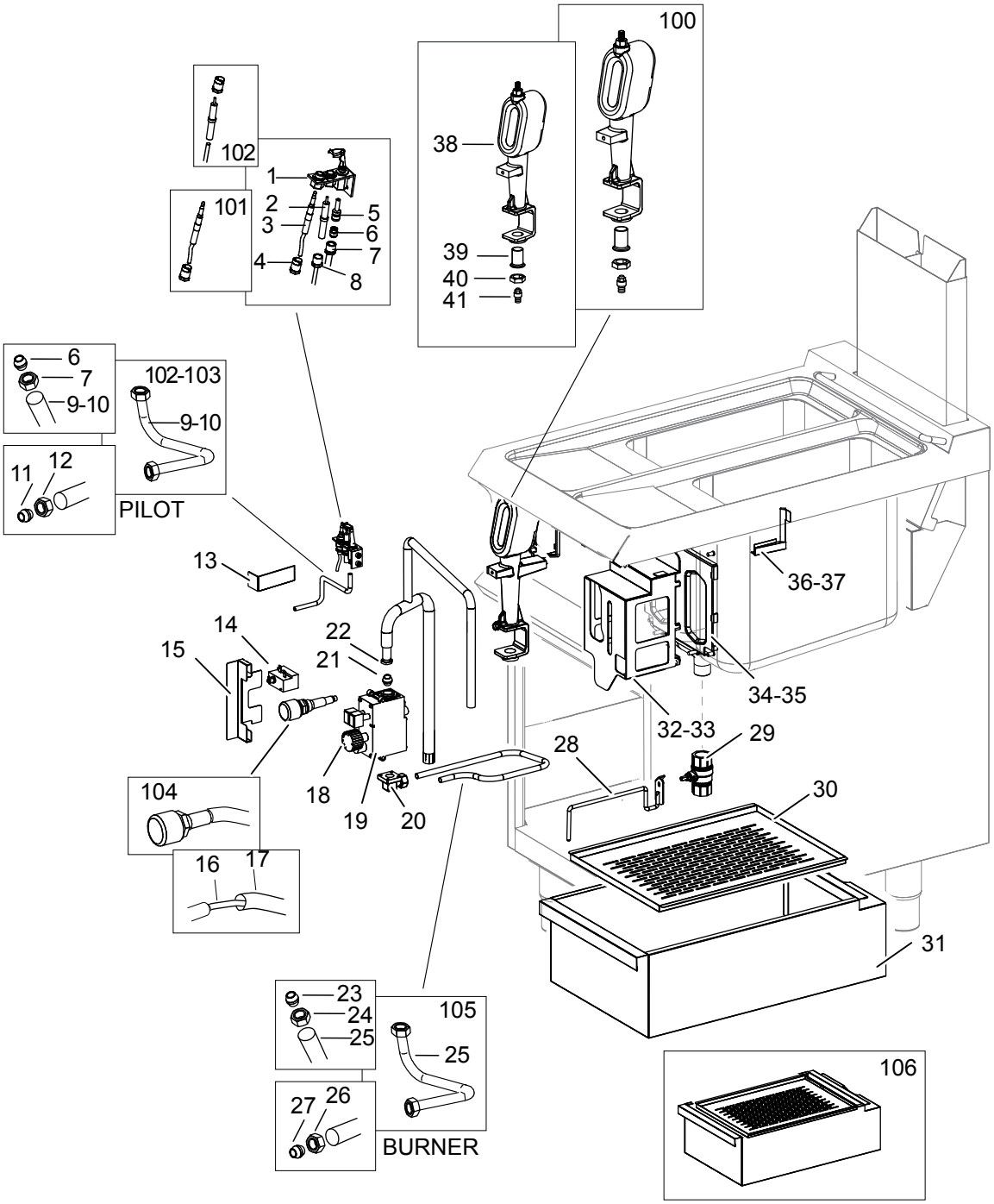
100
38
39
40
41
102
101
1
2
3
4
5
6
7
8
6
7
9-10
102-103
9-10
11
12
PILOT
13
14
15
22
21
18
19
20
104
16
17
23
24
25
105
25
27
26
BURNER
36-37
34-35
32-33
28
29
30
31
106

Nr.	Code	Title	Recommended
1.	RTCP800034	*3 WAYS PILOT BURNER*	✓
2.	RTCP800033	*ROUND SPARK PLUG*	✓
3.	175753	*THERMOCOUPLE*	✓
4.	RTCP800038	*T/COUPLE AND PILOT PIPE NUT*	✓
5.	INIETTORE	*SEE HANDBOOK NOZZLES*	
6.	RTCU800183	*BICONE D.6 MM.11*	✓
7.	RTCU800182	*NUT AC.D.6 BLACK HEIGHT 11 MM.*	✓
8.	RTCU900215	*SPARK NUT*	✓
9.	200892	*LEFT PILOT TUBE*	
10.	200891	*RIGHT PILOT TUBE*	
11.	RTCU900217	*BICONIC+NUT D.6*	✓
13.	175151	*PLATE*	
14.	180499	*SAFETY THERMOSTAT*	✓
15.	200910	*VALVE SUPPORT*	
16.	RTBF700038	*LIGHTING CABLE*	✓
17.	168890	*TRASPARENT SILICON PIPE*	
18.	RTCU900222	*GAS VALVE HANDLE*	✓
19.	167549	*GAS VALVE*	✓
20.	RIC0005226	*KIT*	✓
21.	RTCU800195	*BICONE D.12- INJECTOR SUPPORT*	
22.	161664	*NUT 1/2"*	
23.	RTCU900012	*BICONE D.10*	✓
24.	RTCU900013	*NUT D.10 HEIGHT H. 14 MM*	✓
25.	200745	*FEEDING PIPE FOR BURNER*	
26.	RTCU900013	*NUT D.10 HEIGHT H. 14 MM*	✓
27.	RTCU900012	*BICONE D.10*	✓
28.	180479	*DRAIN TAP U SHAPED BRACKET*	
29.	177037	*OIL DRAIN TAP*	✓
30.	200679	*OIL TANK FILTRE*	
31.	200100	*OIL TANK*	
32.	182635	*BURNER SUPPORT RIGHT LEFT*	
33.	182636	*BURNER SUPPORT RIGHT*	
34.	182618	*LEFT WELDING PROTECTION*	

35.	182632	*RIGHT WELDING PROTECTION*	
36.	179048	*BOMBILLA DERECHA*	
37.	179195	*LEFT BULB*	
38.	161819	*BURNER*	
39.	RTCU700584	*AIR REGULATOR BURNER*	
40.	RTCU900013	*NUT D.10 HEIGHT H. 14 MM*	✓
41.	INIETTORE	*SEE HANDBOOK NOZZLES*	
42.	RTCU900103	*NIPPLE 3/8"*	✓
100.	RIC0004962	*KIT BURNER FRG7*	
101.	RIC0005225	*KIT THERMOCUPLE*	
102.	RIC0005241	*KIT SPARK PLUG FRG74A2V*	
103.	RIC0005222	*KIT PILOT PIPE LEFT*	
104.	RIC0005223	*KIT PILOT PIPE RIGHT*	
105.	RIC0004096	*PIEZO IGNITION + LIGHTING CABLE*	✓
106.	RIC0005025	*KIT PILOT PIPE FTBG77A*	