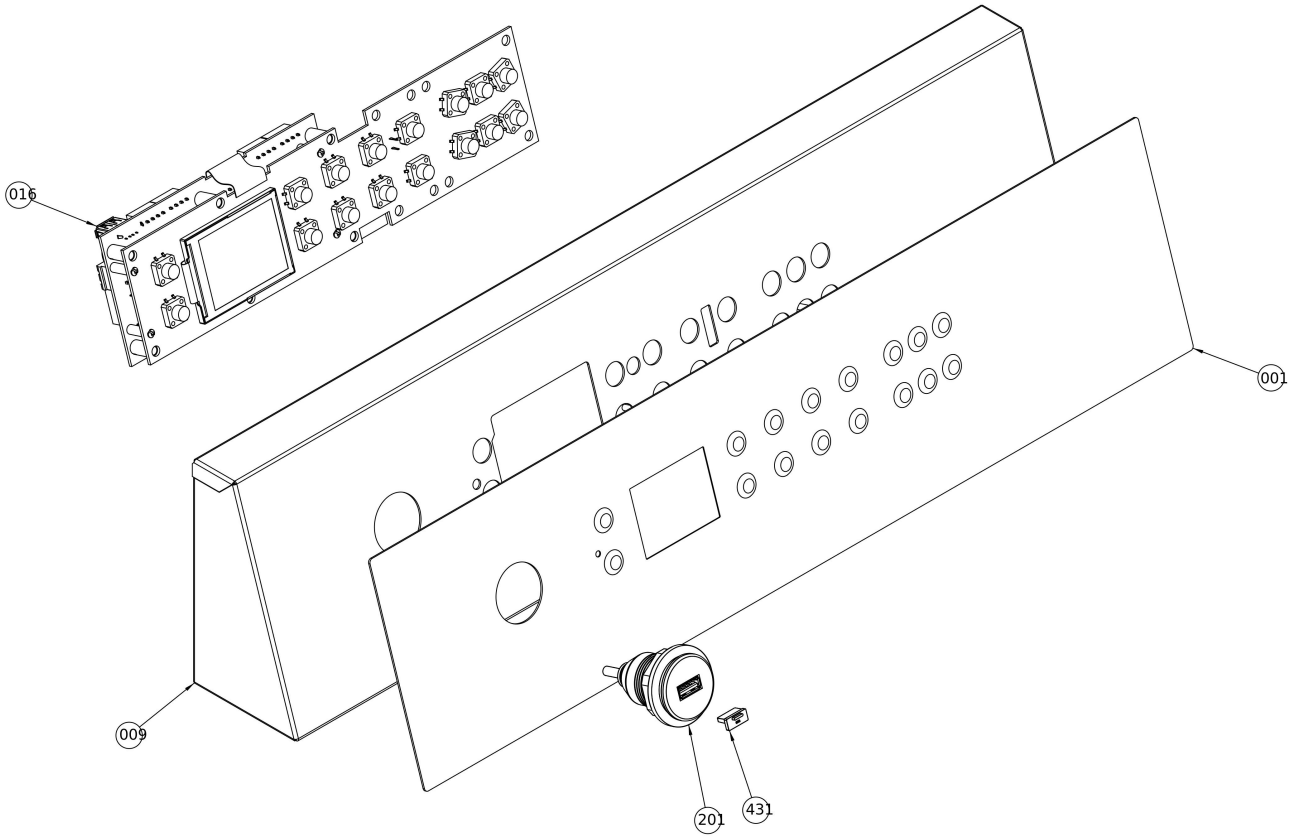

Apach Cook Line

Frontal panel

#	Code	Description	Specification	UM	Qty
001	TBC-FRO*	FRONTAL STICKER	To order share s/n	pz	1
009	TBC-CRU	OVEN FRONTAL PANEL	To order share s/n	pz	1
016	TBC-85SCH00025*	RIALTO 20SCH00072 CONTROL BOARD ASSY	To order share s/n	pz	1
201	020CNT0020	USB CONNECTOR		pz	1
431	040TAP00023	USB COVER		pz	1

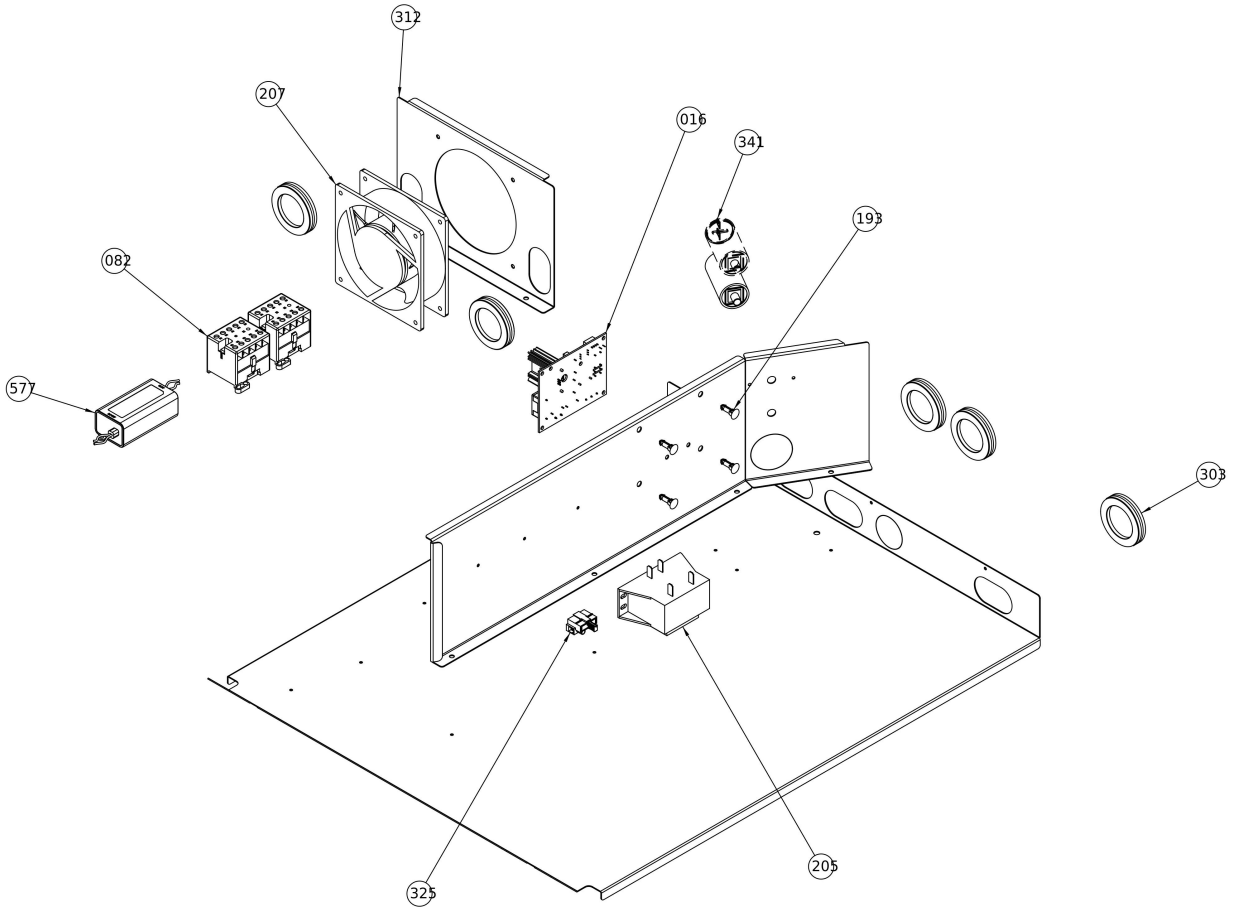

Electrical box

#	Code	Description	Specification	UM	Qty
016	20SCH00076	PHASE CUT RSFAN700		pz	1
082	020TEL0004	BRAKER 4POLES 220/240V 20A		pz	2
193	040DIS00002	FIXING PIN		pz	4
205	020TRS0001	TRASF. METH 230V-12V T5 20VA		pz	1
207	020MOT0009	MOTOR 30W		pz	1
303	040PPC00007	WIRING PLASTIC CONNECTOR		pz	5
312	10SUP00058	AXIAL FAN SUPPORT RIALTO		pz	1
325	20PUL00012	FUSE RACK		pz	1
341	020CND00001	CAPACITOR 6,3 ?F		pz	1
577	20ALM00004	POWER SUPPLIER 16,8W 24V AVP-16-24		pz	1

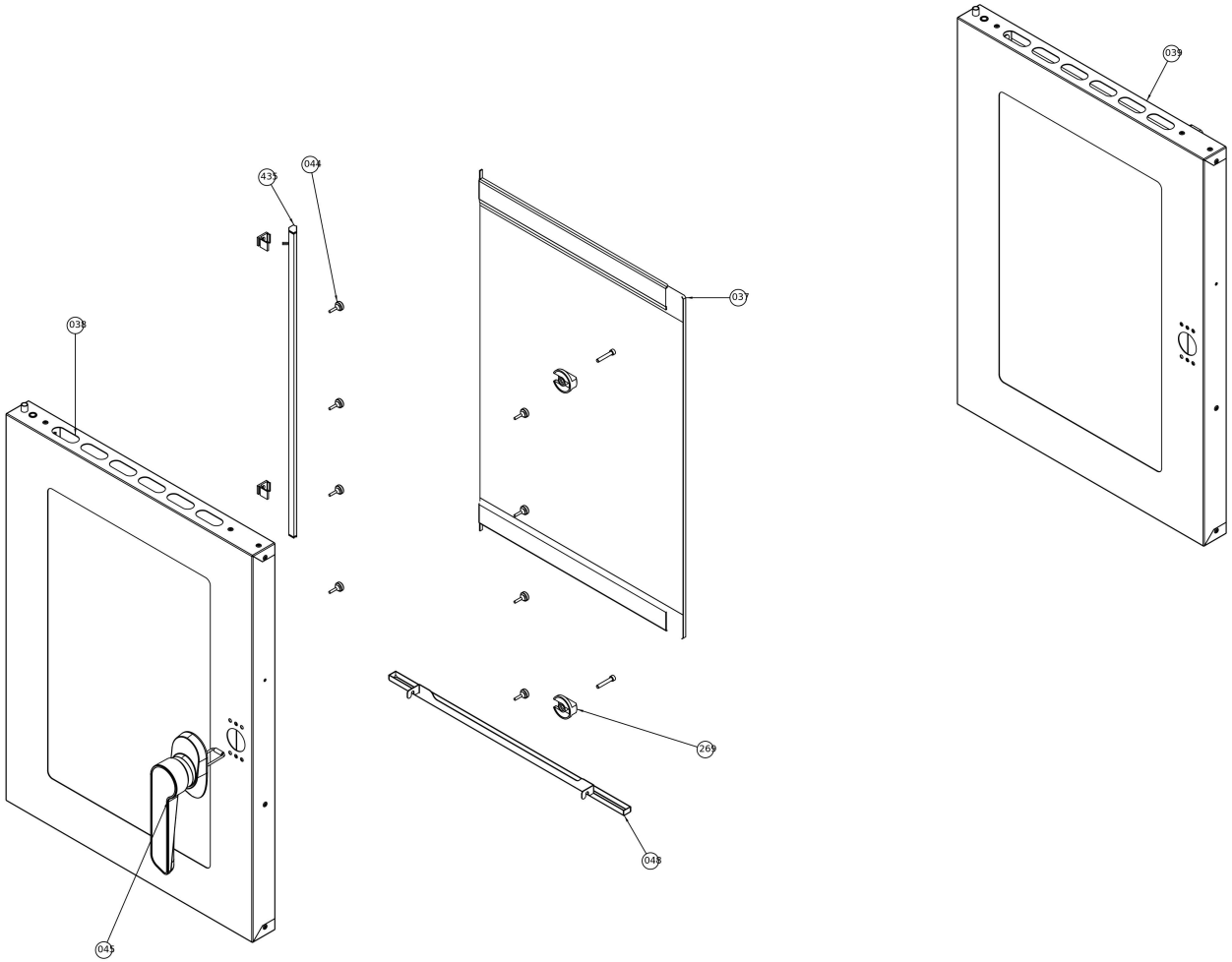

Door

#	Code	Description	Specification	UM	Qty
037	85AVI00015	INTERNAL GLASS ASSY R06		pz	1
038	TBC-85AVE00074*	EXTERNAL GLASS LEFT ASS. R06	To order share s/n	pz	1
039	TBC-85PTA00107*	R06 DOOR ASSEMBLY	To order share s/n	pz	1
044	040TAP00015	INTERNAL GLASS HINGE		pz	6
045	TBC-85MNG00001*	DOOR HANDLE	To order share oven s/...	pz	1
048	10VAS00099	DOOR DROPLET COLLECTOR		pz	1
269	040MAN00010	INTERNAL GLASS BLOCKING KNOB		pz	2
435	020LED0001	LAM LED PT 4T CR380OP4 L=405MM		pz	1

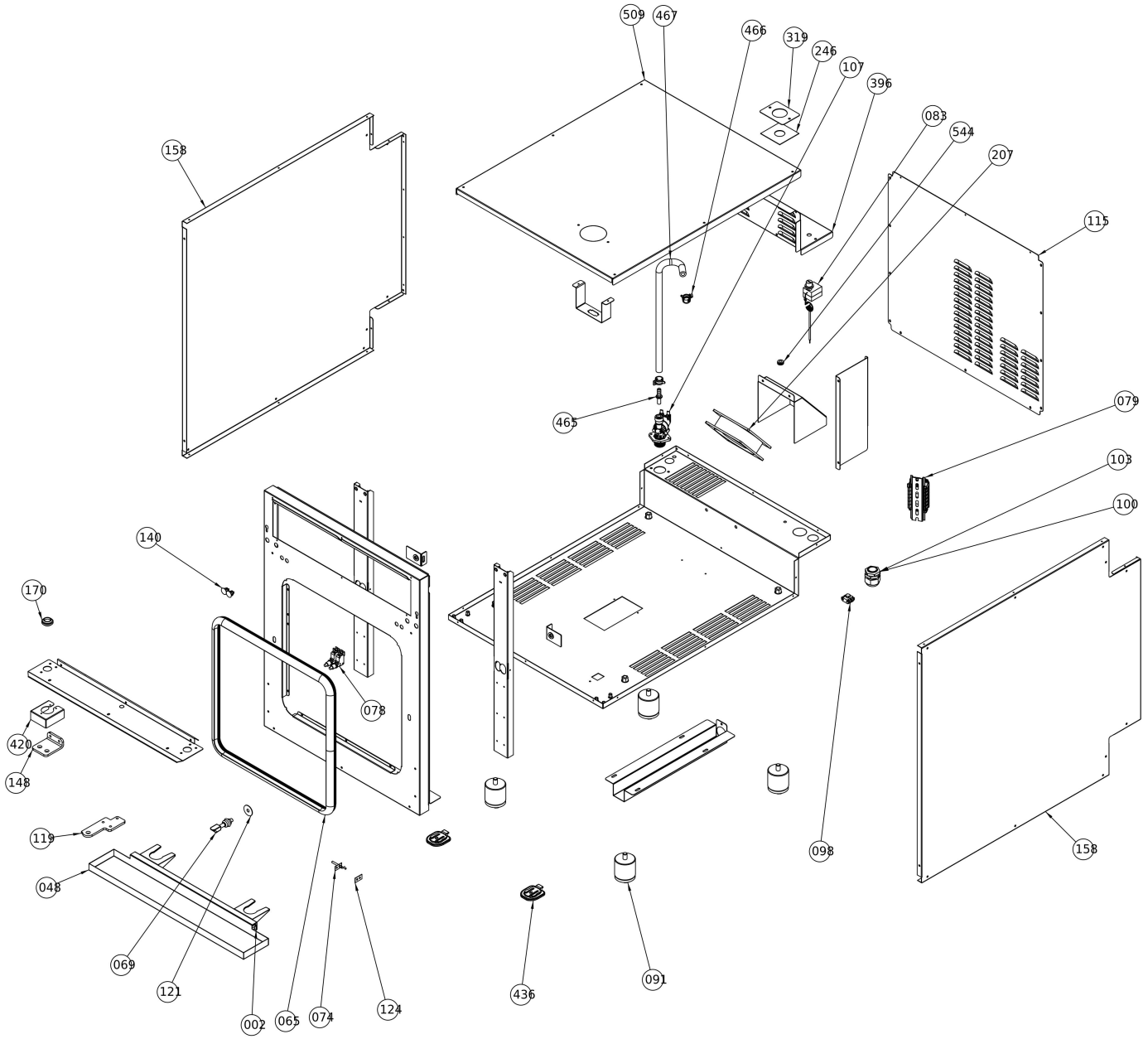
509
467
466
319
246
107
396
083
544
207
115
158
465
079
103
100
140
170
078
420
148
119
048
069
121
002
065
074
124
436
091
098
158

Oven body

#	Code	Description	Specification	UM	Qty
002	40DIS00012	DROPLET COLLECTOR CONNECTION		pz	2
048	10VAS00098	DROPLET COLLECTOR RIALTO		pz	1
065	040GUA00014	GASKET CONVECTION OVENS BURANO/TORCELLO		cm	152
069	60NAS00003	DOOR LOCKING SYSTEM		pz	1
074	020SON0002	PROBE TCJ FLANGED		pz	1
078	020PUL0002	NO/NC MICRO SWITCH		pz	1
079	020MOR0004	MAIN TERMINAL BLOCK KLEMSAN		pz	1
083	020TER0007	SAFETY THERMOSTAT		pz	1
091	50PIEAI002	ADJUSTABLE FEET H 50 MM		pz	4
098	020MOR0001	GROUND TERMINAL		pz	1
100	040PPC00002	CABLE FIXING		pz	1
103	040CTD00002	NUT		pz	1
107	020ELE0001	SINGLE SOLENOID VALVE		pz	1
115	10FIA00016	OVEN BACK R06		pz	1
119	10PIA00217	LOWER HINGE RIALTO		pz	1
121	10PIAA10SAA013	PLATE		pz	1
124	040GUA00007	GASKET FOR PROBE		pz	1
140	040TAP00016	PLASTIC COVER		pz	2
148	10CER00052	UPPER HINGE RIALTO		pz	1
158	10FIA00014	LEFT-RIGHT SIDE R06		pz	2
170	040PPC00004	MEMBRANE		pz	1
207	020MOT0009	MOTOR 30W		pz	1
246	040GUA00010	FIREPLACE GASKET		pz	1
319	10PIAA10SAA072	PLATE		pz	1
396	10TOP00040	UPPER BACK COVER		pz	1
420	10PRP00240	UPPER HINGE COVER		pz	1
436	40DIS00011	CLIP		pz	2
465	40RAC00034	PIPE HOSE 8-8		pz	1
466	40FSC00010	STEEL SPRING TIE DIA 15		pz	2
467	30TBG00003	HIGH TEMPERATURE PIPE		pz	40
509	10TOP00041	UPPER OVEN COVER		pz	1
544	040PPC00008	WIRING PLASTIC CONNECTOR		pz	1

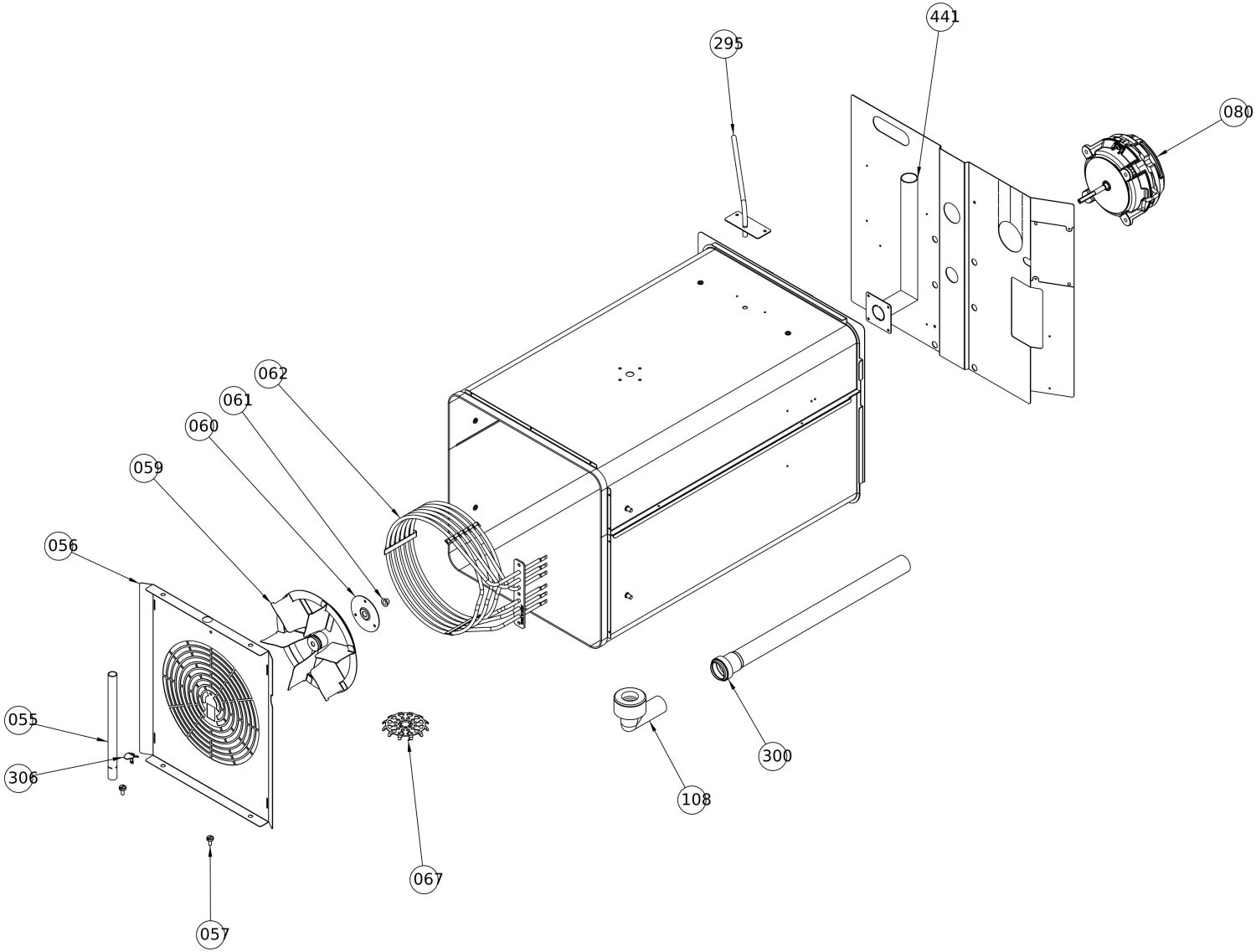

Cooking chamber

R

#	Code	Description	Specification	UM	Qty
055	30TBA00123	FAN HUMIDIFICATION PIPE ?16MM R06		pz	1
056	10DEF00076	AIR DEFLECTOR R06		pz	1
057	70VIT041	SCREW FOR DEFLECTOR		pz	2
059	60VENAI013	IMPELLER 200X61 AIRTEK 2.0		pz	1
060	10PIAA10LAA009	PLATE FOR MOTOR		pz	1
061	040BOC00006	CRANKSHAFT BUSH		pz	1
062	20RES00042	HEATING ELEMENT 5 KW		pz	1
067	85PIA00007	DRAIN COVER		pz	1
080	020MOT0028	MOTOR 230V		pz	1
108	30TBS00002	BEND 90° 30 MM		pz	1
295	85TBB00021	HUMIDIFICATION PIPE ASSEMBLY		pz	1
300	30TBS00001	SOCKETED PIPE D30MM L500MM		pz	1
306	10PIA00266	HUMIDIFICATION PIPE PLUG PLATE		pz	1
441	85TBB00023	STEAM OUTLET PIPE ASSEMBLY RIALTO		pz	1

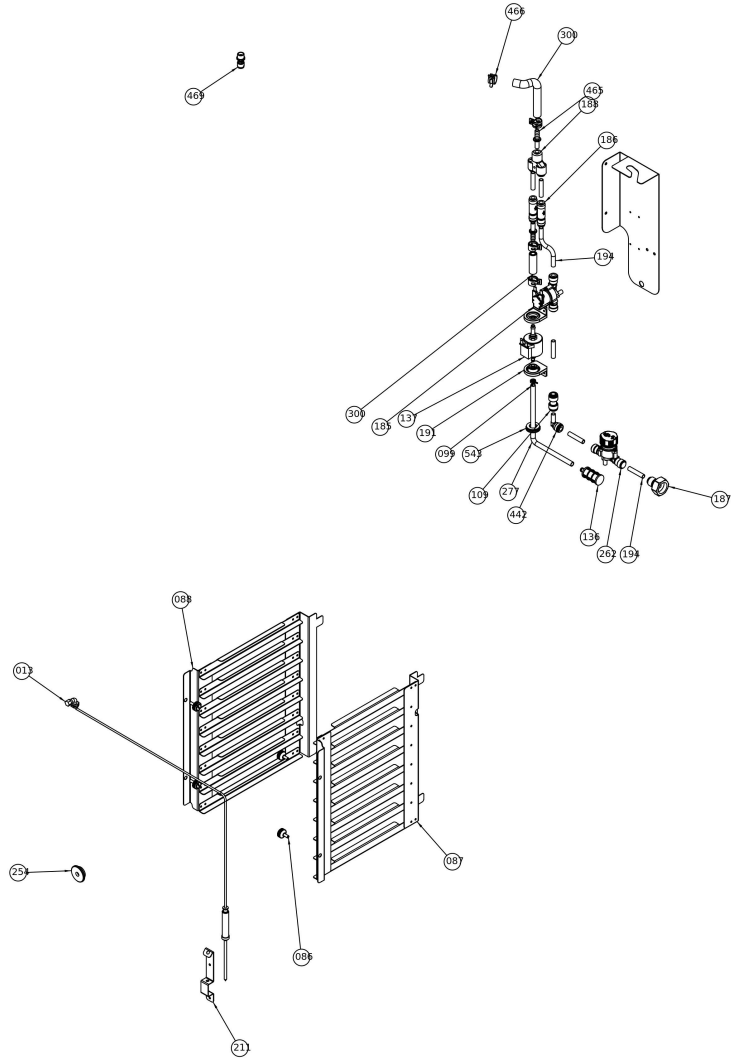

Internal accessories

#	Code	Description	Specification	UM	Qty
013	020SON0006	CORE PROBE		pz	1
086	70VIT015_B	SCREW M5X12 BULCK HEAD SHINE PLATE SS		pz	4
087	TBC-GRI_DX	RIGHT TRAYS HOLDER	To order share s/n	pz	1
088	TBC-GRI_SX	LEFT TRAYS HOLDER	To order share s/n	pz	1
099	040FSC005	BAND SPRING DN 10.1		pz	1
109	040RAC00002	PLASTIC CONNECTOR		pz	1
136	40FIL00004	DETERGENT FILTER+WEIGHT		pz	1
137	20PMP00006	DET. PUMP.230V50/60HZ MPP1.01.XXX.Y/ST		pz	1
185	020ELE0004	SELF CLEAN SOLENOID VALVE		pz	1
186	040RAC00005	CHECK VALVE IN/OUT JG 8MM 5/16SCV		pz	2
187	040RAC00006	PLASTIC 3/4 JUNCTION		pz	1
188	040RAC00003	Y JOINT 5/16		pz	1
191	50PAR00020	DETERGENT PUMP SILENT BLOCK		pz	2
194	30TUBP80007	TUBE LLDPE 8/6		cm	30
211	10PIA00254	CORE PROBE LOCK PLATE		pz	1
254	040BOC00009	BUSHING CORE PROBE		pz	1
262	040FIL002	IN/OUT FILTER JG		pz	1
277	30TUBPVC003	PLASTIC WATER PIPE PVC 6X9		cm	200
300	30TBG00004	HIGH TEMPERATURE PIPE		pz	15
442	40RAC00029	RACC. A 90° CON CODOLO 5/16MM PM220808S		pz	1
465	40RAC00034	PIPE HOSE 8-8		pz	2
466	40FSC00010	STEEL SPRING TIE DIA 15		pz	4
469	61UGE00002	WASHING ROTOR TR02Y02-441/330		pz	1
543	040PPC00010	WALL PASSTHROUGH MEMBRANE DIA 21		pz	1